TABLE OF CONTENTS

MISCELLANEOUS	
Masonry Trash Container Enclosure	MI 1
Wooden Trash Container Enclosure	MI 2
Survey Monument	MI 3
STORM DRAINAGE	
Drop Inlet	SD 1
Inlet Structure	SD 2
Inlet Structure Steel Throat	SD 3
Standard Manhole	SD 4
Manhole Frame & Cover	SD 5
SANITARY SEWER	
48" Manhole	SS 1
60" Manhole	SS 2
Drop Manhole	SS 3
Eccentric Manhole	SS 4
Manhole Frame & Cover	SS 5
Terminal Cleanout	SS 6
Manhole Frame & Cover Adjustment Detail	SS 7
Lateral	SS 8
STREETS	
Local & Collector Streets	ST 1A
Secondary Street	ST 1B
Major Arterial Street	ST 1C
Alley	ST 1D
Cul-de-Sac	ST 2
Street Bulb Connection	ST 3
Alley Approach	ST 4
Alley "V" Gutter	ST 5
Barrier Type Curb & Gutter	ST 6
Rolled Type Curb & Gutter	ST 7
Monolithic Curb, Gutter & Sidewalk	ST 8
Sidewalk	ST 9
Curb Return	ST 10
Residential Drive Approach	ST 11
Commercial Drive Approach	ST 12
Curb Removal at New Drive Approach	ST 13
Barrier Type Curb Only	ST 14
Concrete Gutter at Existing Curb	ST 15
Cross Gutter	ST 16
Timber Barricade	ST 17
Street Sign Location	ST 18
Traffic Bars	ST 19
Pavement Patches	ST 20
Tree Well Commercial Sidewalk Pattern Only	ST 21
WATER	
Concrete Thrust Block Detail	WA 1
Fire Hydrant Assembly	WA 2
Gate Valve	WA 3
Valve Access Box	WA 4
1" Water Service	WA 5
Blow Off	WA 6
Fire Serfice	WA 7
Fire Hydrant Protection Assembly	WA 8

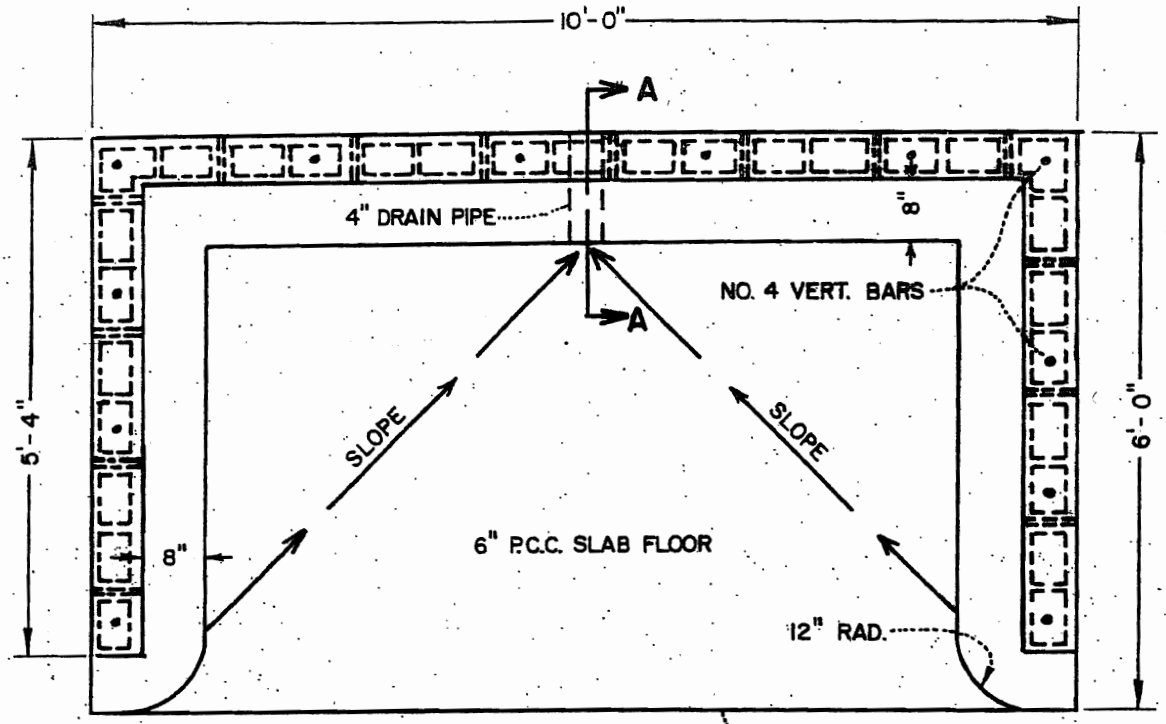

SLAB TO BE FLUSH WITH ASPHALT CONCRETE PAVEMENT.

PLAN

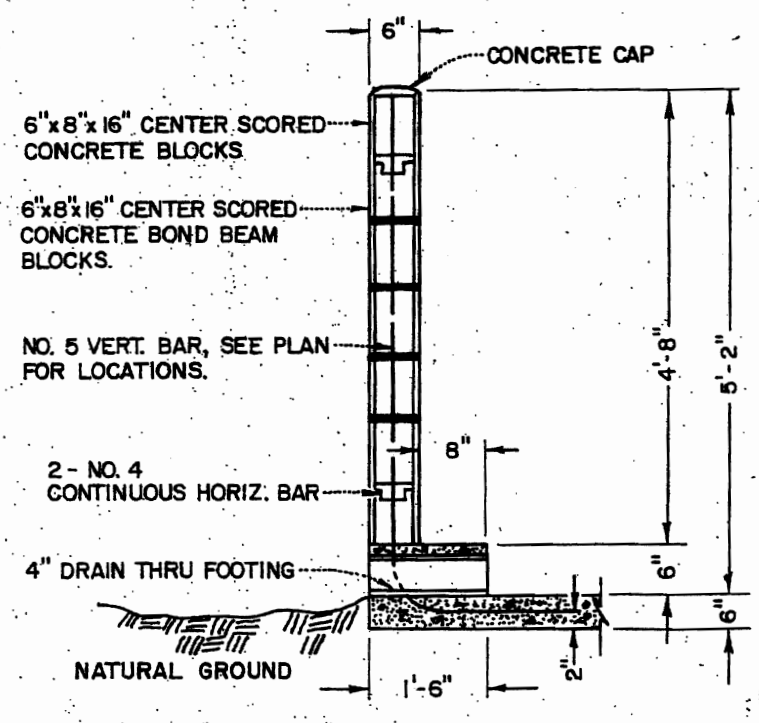

SECTION A-A

NOTES:

1. ALL CELLS IN CONCRETE BLOCKS SHALL BE FILLED SOLID WITH COURSE AGGREGATE GROUT
2. CORNER BLOCK ENDS AND CENTER WEB SHALL BE BOND BEAM BLOCK
3. ALL HORIZONTAL & VERTICAL JOINTS SHALL BE RAKED TO MATCH CENTER SCORED BLOCK.
4. CONCRETE BLOCK, MORTAR AND COARSE GROUT SHALL CONFORM WITH LATEST EDITION OF THE UNIFORM BUILDING CODE.
5. SLAB FLOOR AND FOOTING SHALL BE 2500psi PORTLAND CEMENT CONCRETE.
6. GROUND TO BE SLOPED AWAY FROM WALLS.

THIS STANDARD IS FOR SINGLE 3 c.y. OR SMALLER BINS.

CITY OF *Lindsay*
DEPARTMENT OF PUBLIC WORKS

MASONRY TRASH CONTAINER ENCLOSURE

MARK	DATE	REVISION

Engineering Standard
Approved James L. White
Date 9/14/79

MI-1

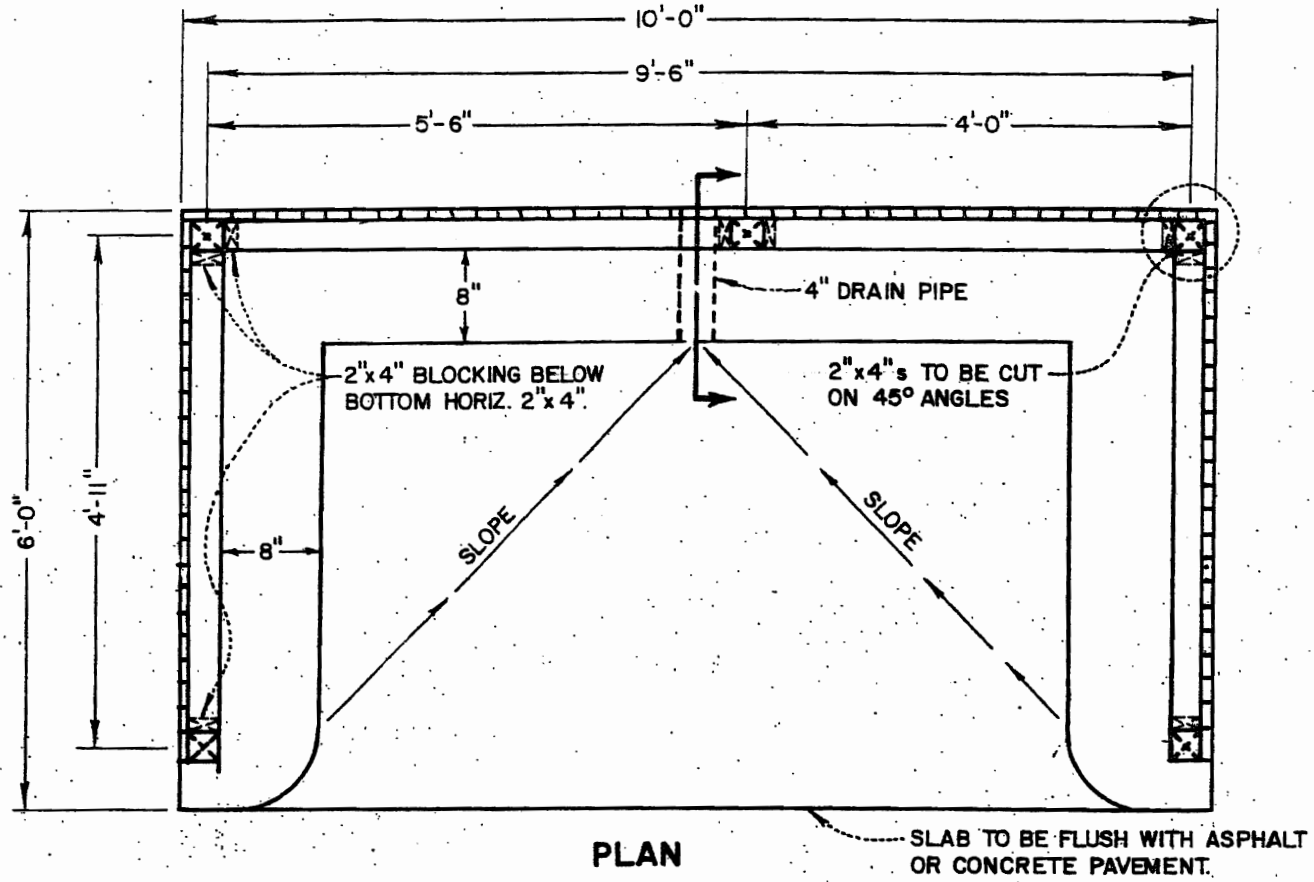

PLAN

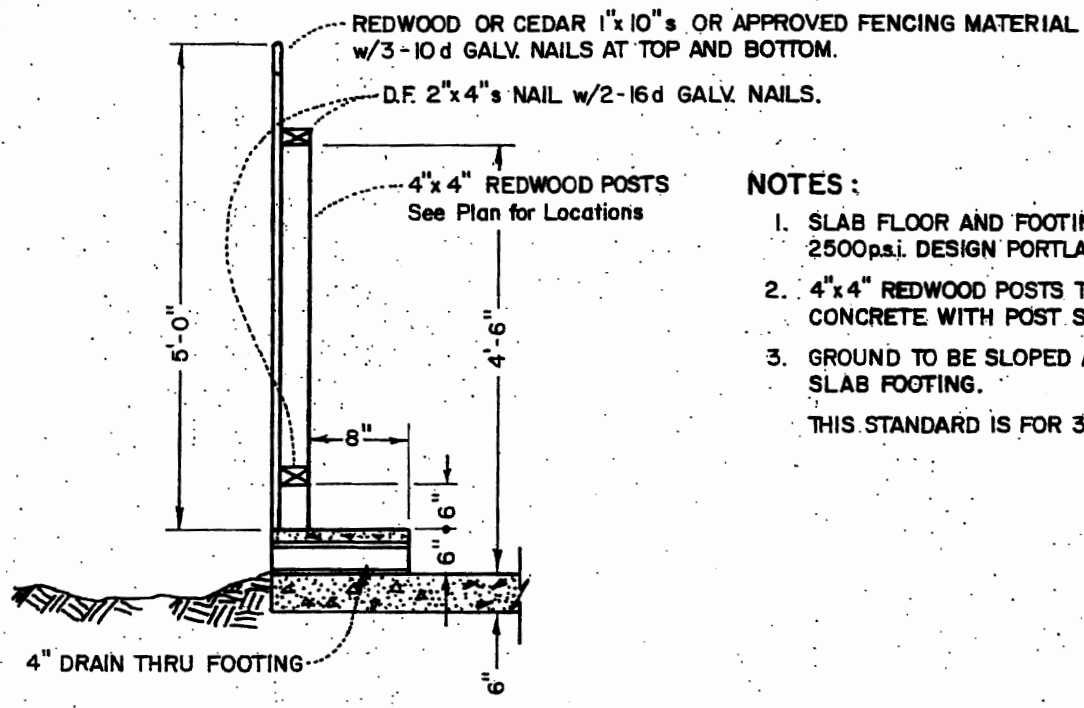

SECTION A-A

NOTES:

1. SLAB FLOOR AND FOOTINGS SHALL BE 2500p.s.i. DESIGN PORTLAND CEMENT CONCRETE.
2. 4"x4" REDWOOD POSTS TO BE ANCHORED TO CONCRETE WITH POST SUPPORTS.
3. GROUND TO BE SLOPED AWAY FROM THE SLAB FOOTING.

THIS STANDARD IS FOR 3 c.y. OR SMALLER BINS.

CITY OF *Lindsay*
DEPARTMENT OF PUBLIC WORKS

WOODEN TRASH CONTAINER ENCLOSURE

MARK	DATE	REVISION

Engineering Standard
Approved [signature]
Date 9/14/79

MI-2

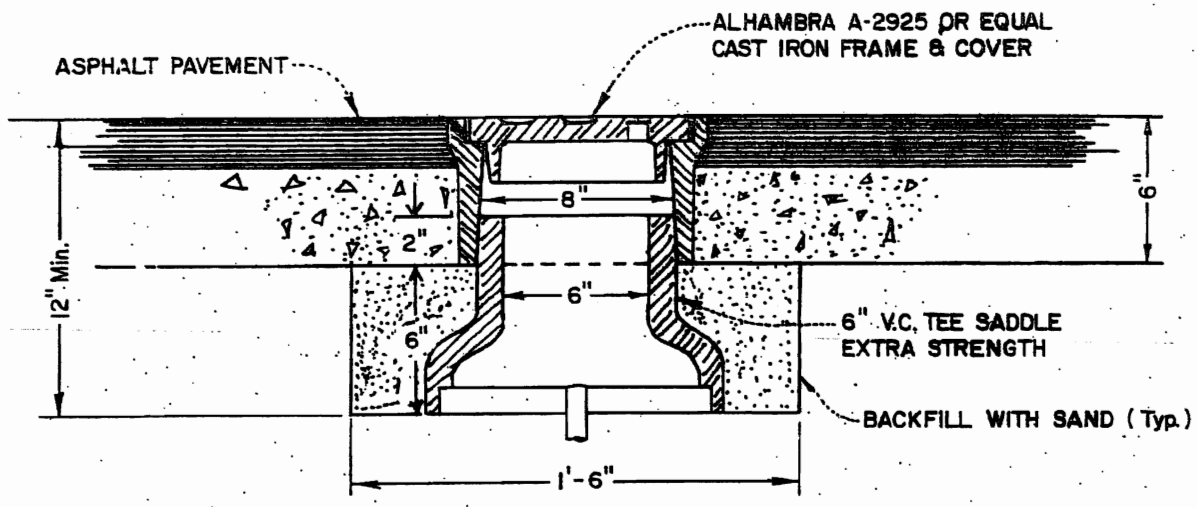

MONUMENT COVER
To be used with Type A or B monument

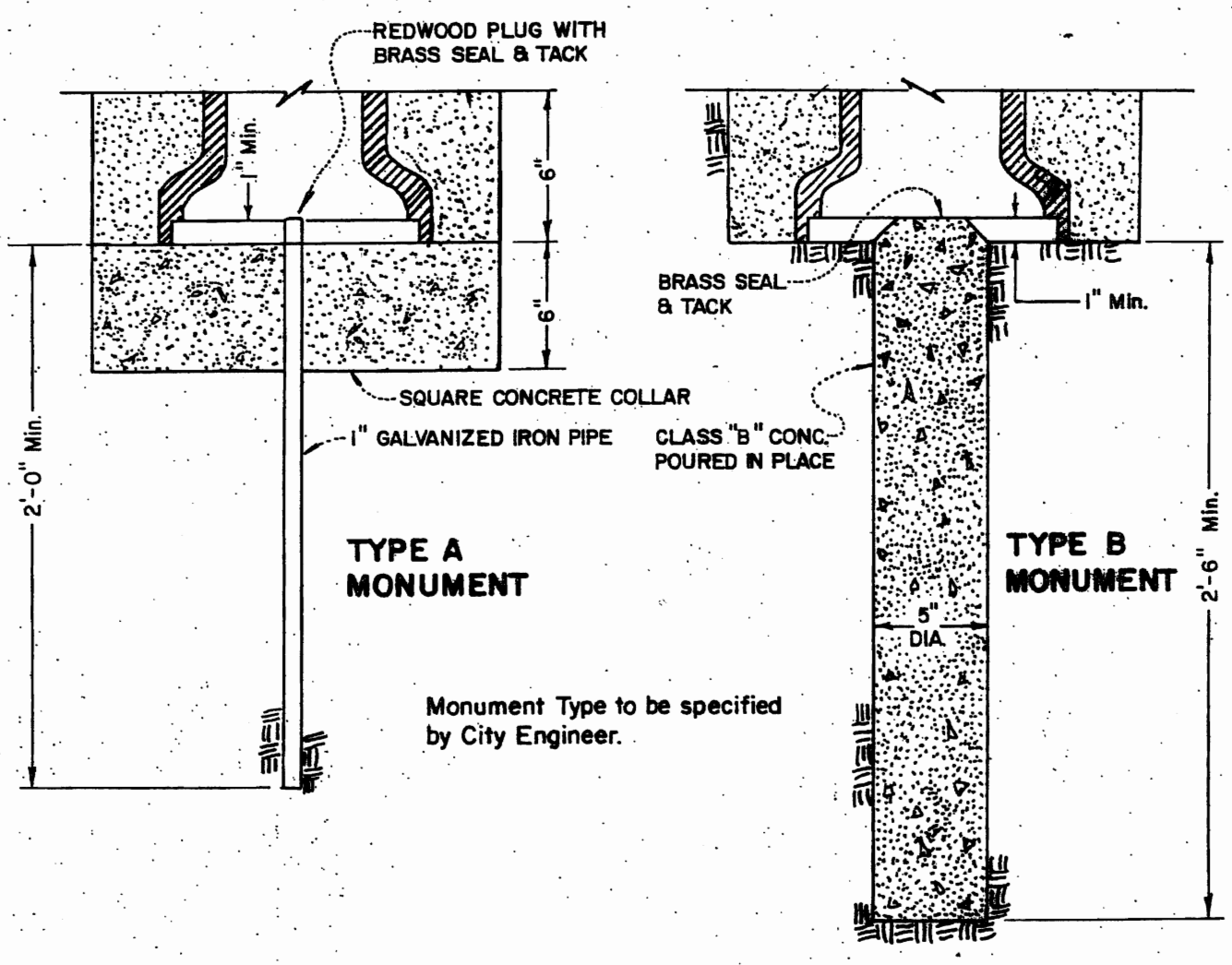

Monument Type to be specified by City Engineer.

CITY OF Lindsay
DEPARTMENT OF PUBLIC WORKS

SURVEY MONUMENT

MARK	DATE	REVISION	Engineering Standard	
			Approved	MI-3
			Date 9/14/79	

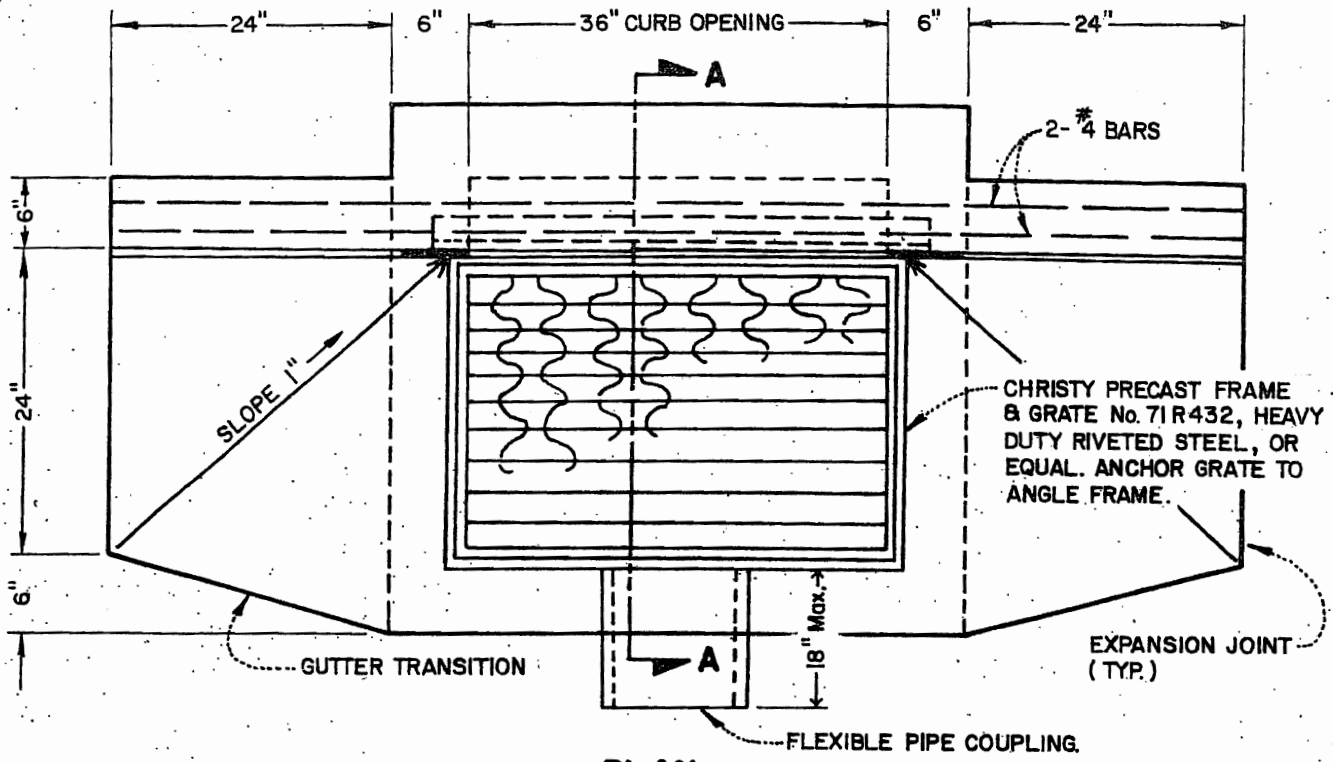

PLAN

NOTES:

1. CONCRETE SHALL REACH A MINIMUM COMPRESSIVE STRENGTH OF 2500 P.S.I. AT 28 DAYS.
2. ALL REBAR SHALL CONFORM TO A.S.T.M. DESIG. A-615, GRADE 40

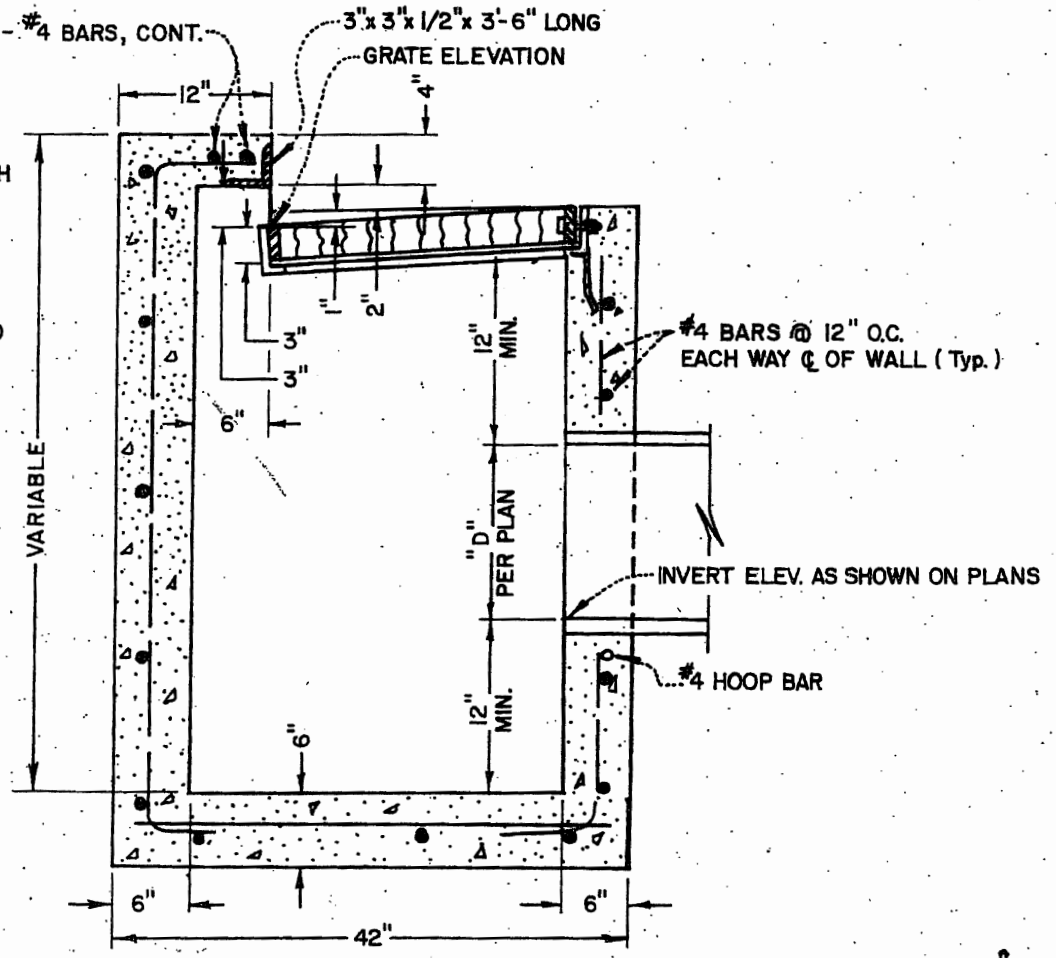

SECTION A-A

CITY OF *Lindsay*
DEPARTMENT OF PUBLIC WORKS

DROP INLET

MARK	DATE	REVISION

Engineering Standard
Approved [signature]
Date 9/14/79

SD-1

Not latest - Rev 1

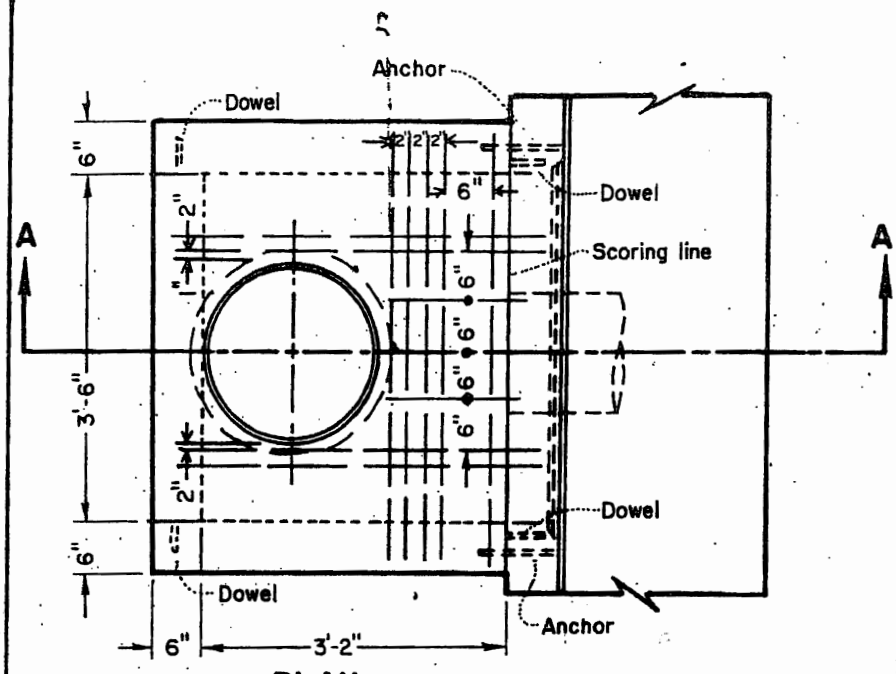

PLAN

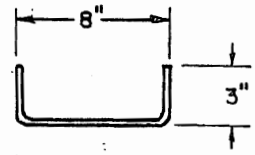

DOWEL DETAIL

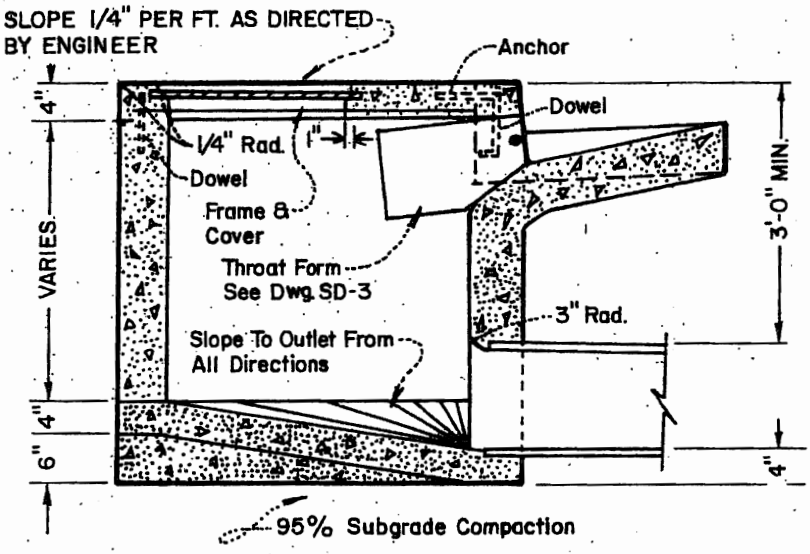

SECTION A-A

STEEL LIST	
DESCRIPTION	REQ'D.
3 BARS 4'-4" LONG	5
3 BARS 3'-11" LONG	4
3 BARS 1'-7" LONG	3
DOWEL See Detail	4
ANCHOR 4 12", 1/4" WELD	2
FRAME & COVER, Pinkerton A-335 or Equal.	1
FACE ANGLE & THROAT FORM - See Dwg. SD-3	1

CONCRETE SHALL BE 3000 p.s.i.

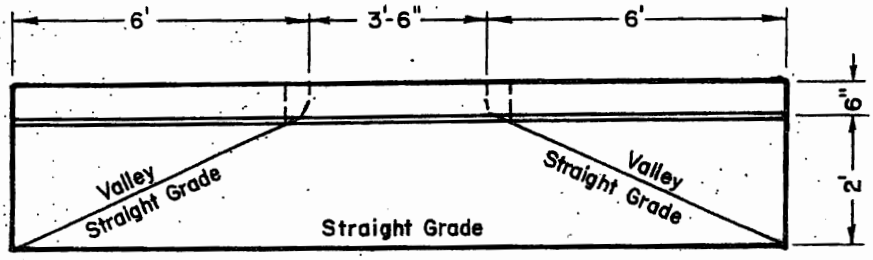

NOTE: WHEN STRUCTURE SERVES AS AN OUTLET, GUTTER GRADE SHALL NOT BE DEPRESSED.

CITY OF Lindsay
DEPARTMENT OF PUBLIC WORKS

INLET STRUCTURE

MARK	DATE	REVISION

Engineering Standard
Approved
Date 9/14/79

SD-2

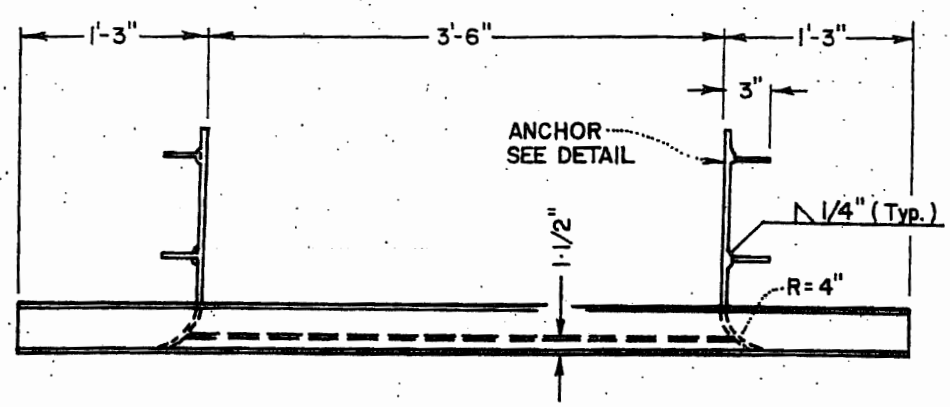

PLAN

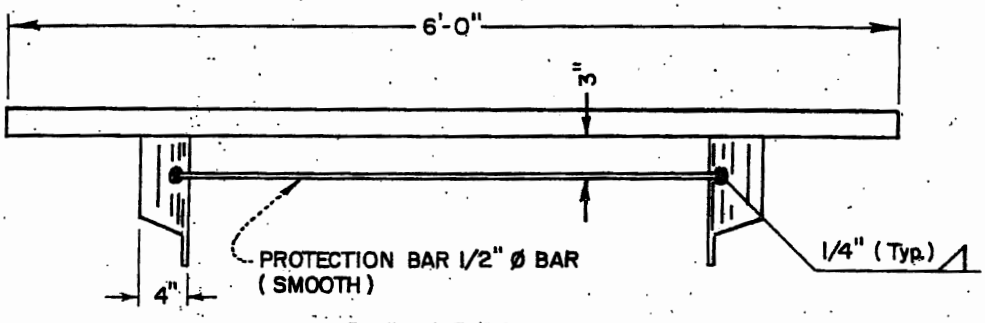

ELEVATION

NOTES:

1. ALL DIMENSIONS ARE FINISHED DIMENSIONS.
2. ALL PARTS SHALL BE STRUCTURAL GRADE STEEL UNLESS NOTED OTHERWISE.
3. ALL EXPOSED METAL PARTS PERTAINING TO THROAT FORM SHALL BE PAINTED OR DIPPED WITH AN ALUMINUM COLOR ASPHALTUM PAINT.

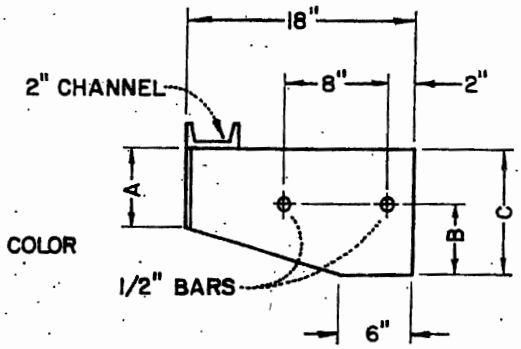

ANCHOR DETAIL

DIMENSIONS	A	B	C
INLET BOX	6-5/16"	5"	10"
OUTLET BOX	3-3/16"	2-1/2"	5"

CITY OF Lindsay
DEPARTMENT OF PUBLIC WORKS

INLET STRUCTURE STEEL THROAT

MARK	DATE	REVISION

Engineering Standard
Approved [signature]
Date 9/14/79

SD-3

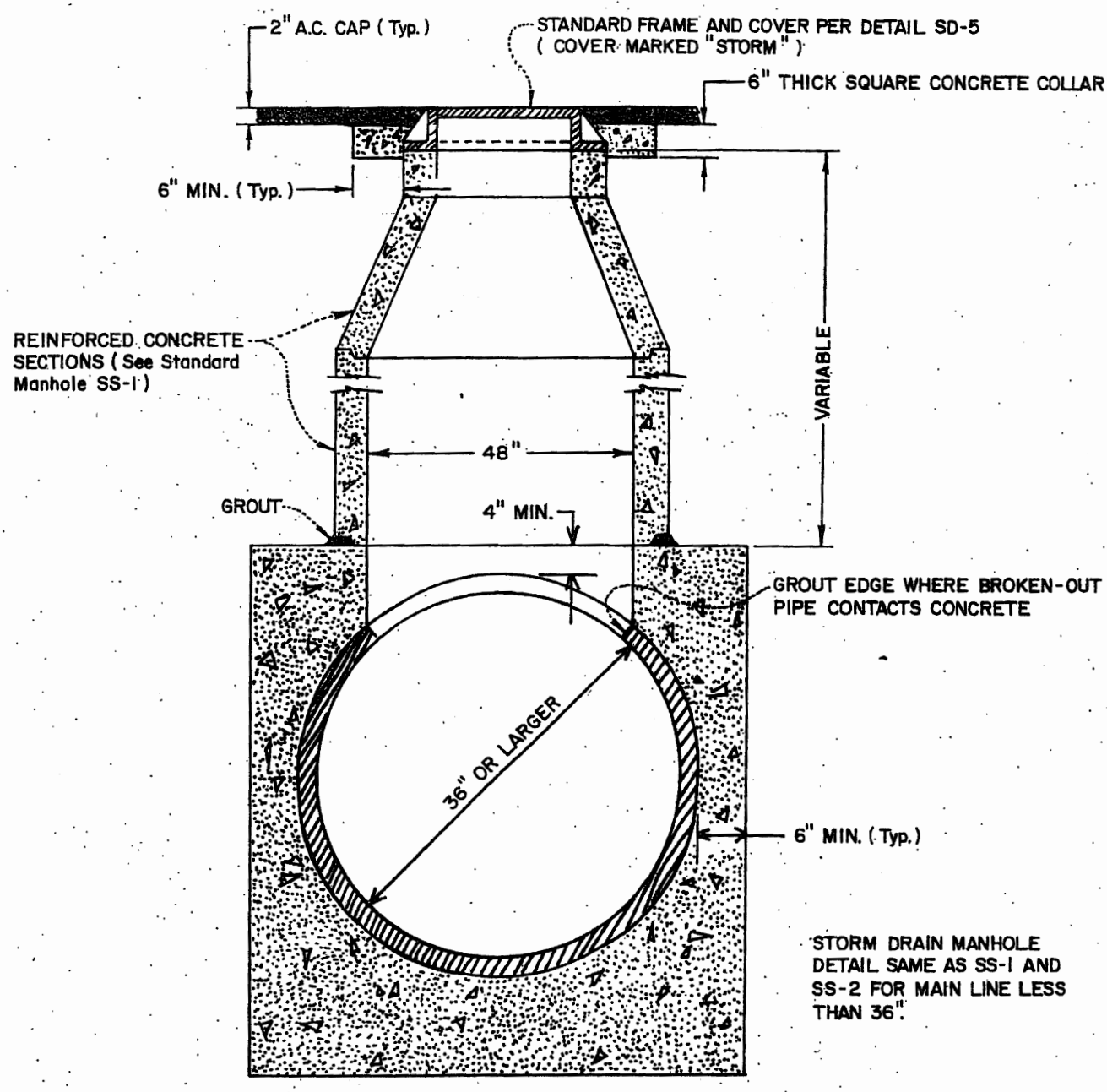

NOTES :

1. REINFORCED CONCRETE PIPE SECTIONS SHALL MEET REQUIREMENTS OF A.S.T.M. SPECIFICATION C-478-64T.
2. MANHOLE BASE SHALL BE OF CONCRETE CONTAINING 6 SACKS OF PORTLAND CEMENT PER CUBIC YARD.

CITY OF *Lindsay*
DEPARTMENT OF PUBLIC WORKS

STANDARD MANHOLE

MARK	DATE	REVISION

Engineering Standard
Approved
Date 9/14/79

SD-4

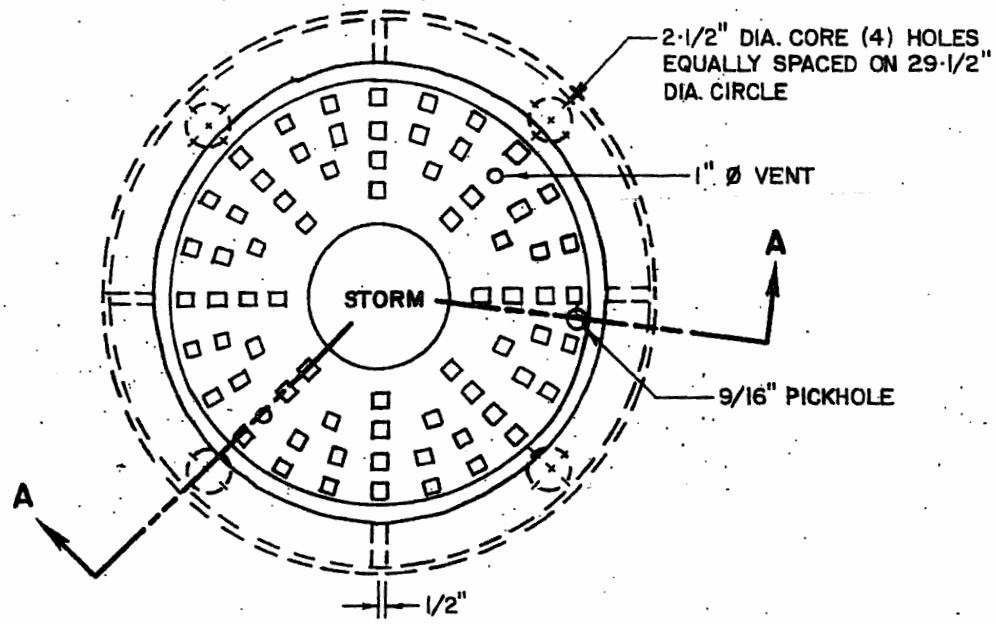

PLAN VIEW

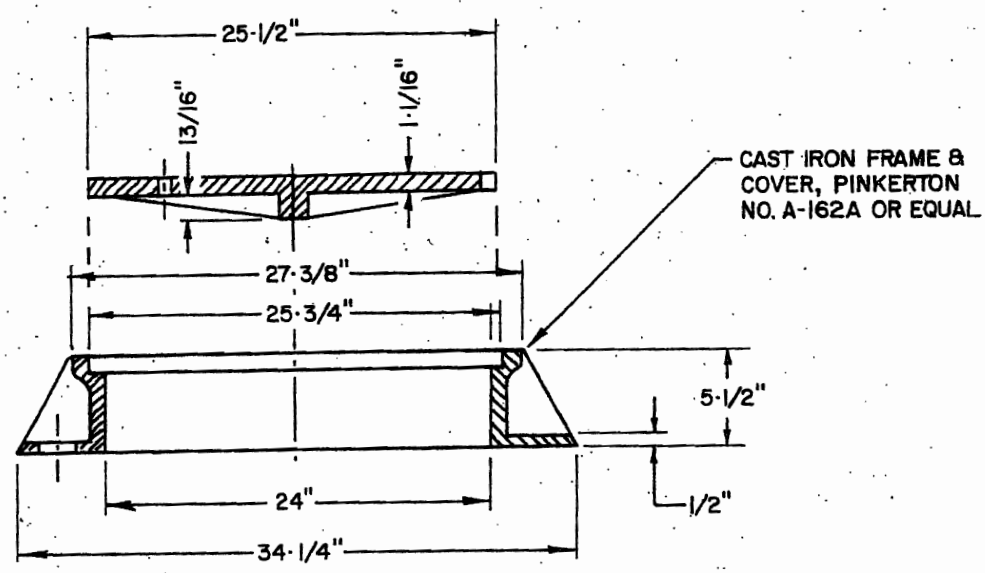

SECTION A-A

REFERENCE DRAWING
STANDARD MANHOLE..... S-1

CITY OF *Lindsay*
DEPARTMENT OF PUBLIC WORKS

MANHOLE FRAME AND COVER

MARK	DATE	REVISION

Engineering Standard
Approved [signature] SD-5
Date 9/13/79

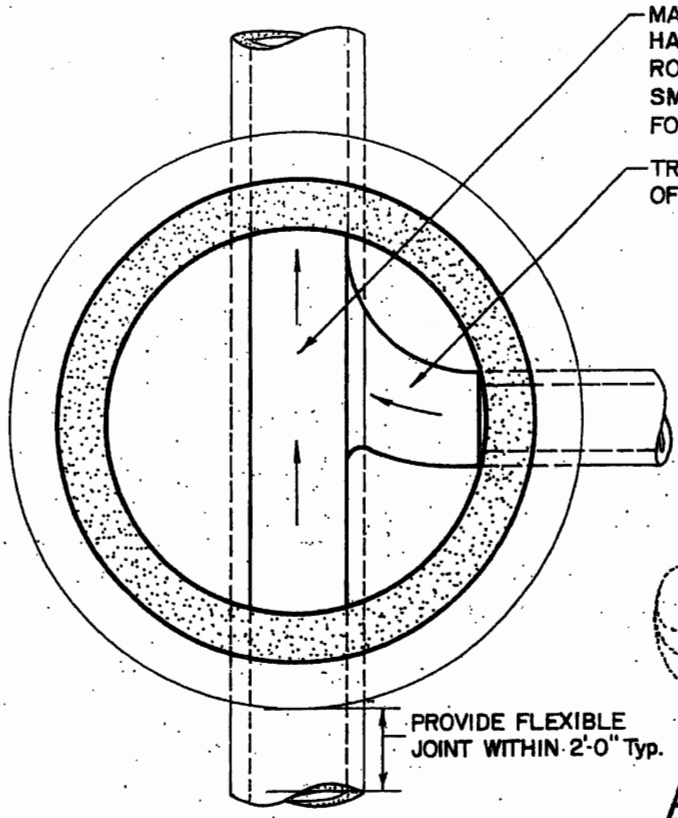

SECTION A-A

NOTES:

1. ALL MATERIALS AND WORKMANSHIP SHALL CONFORM TO THE REQUIREMENTS OF THE STANDARD SPECIFICATIONS.
2. PRECAST REINFORCED CONCRETE MANHOLE SHALL BE CONSTRUCTED IN ACCORDANCE WITH THE PROVISIONS OF A.S.T.M. DESIGNATION C-76.
3. ALL CONCRETE SHALL BE 2500p.s.i.(5 SACK MIX)

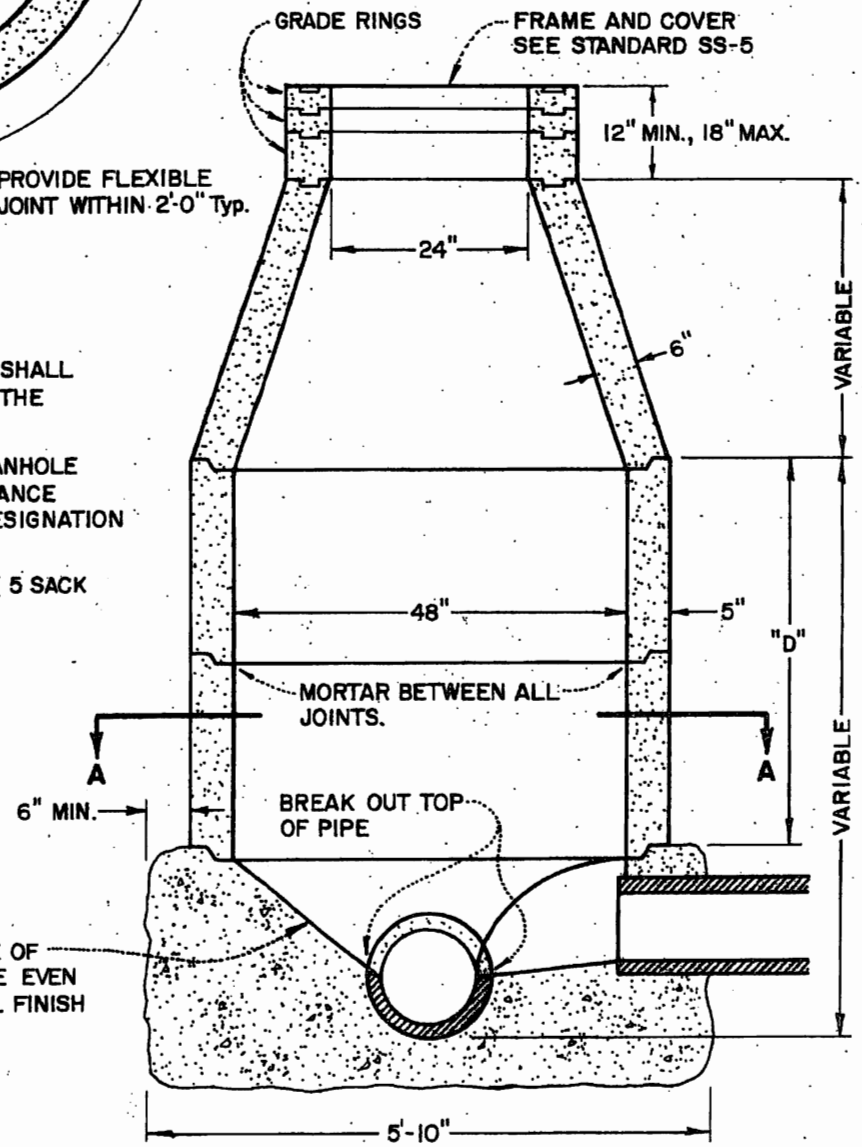

VERTICAL SECTION

CITY OF Lindsay
DEPARTMENT OF PUBLIC WORKS

48" MANHOLE

MARK	DATE	REVISION

Engineering Standard
Approved [signature]
Date 9/13/79

SS-1

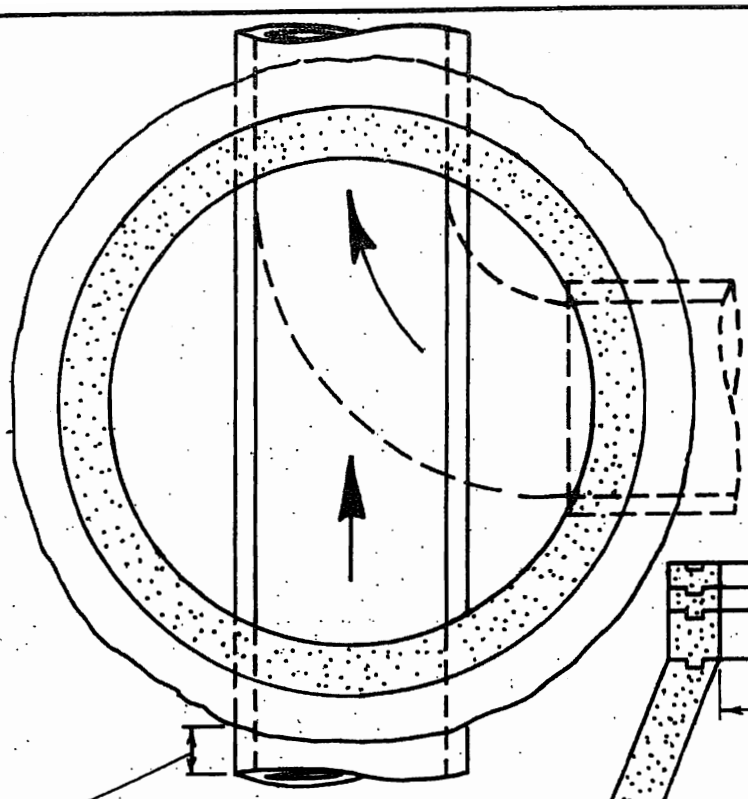

MAIN LINE LAID CONTINUOUS THROUGH MANHOLE. TOP HALF OF PIPE TO BE REMOVED TO PROVIDE OPENING. ROUGH BROKEN EDGES SHALL BE MORTARED. SMOOTH. MAX. 30" SHALL REQUIRE MANHOLE DESIGN BY ENGINEER.

PROVIDE FLEXIBLE JOINT WITHIN 2'-0" (Typ.)

SECTION A-A

NOTES:

1. ALL MATERIALS AND WORKMANSHIP SHALL CONFORM TO THE REQUIREMENTS OF THE STANDARD SPECIFICATIONS.
2. PRECAST REINFORCED CONCRETE MANHOLE SHALL BE CONSTRUCTED IN ACCORDANCE WITH THE PROVISIONS OF A.S.T.M. DESIGNATION C-478.
3. QUARTER TURNS TO BE CONSTRUCTED TO FORM A SMOOTH FLOW LINE OF SAME SHAPE AND PATTERN AS BOTTOM WALL OF PIPE.
4. ALL CONCRETE SHALL BE 2500psi. (5 SACK MIX)

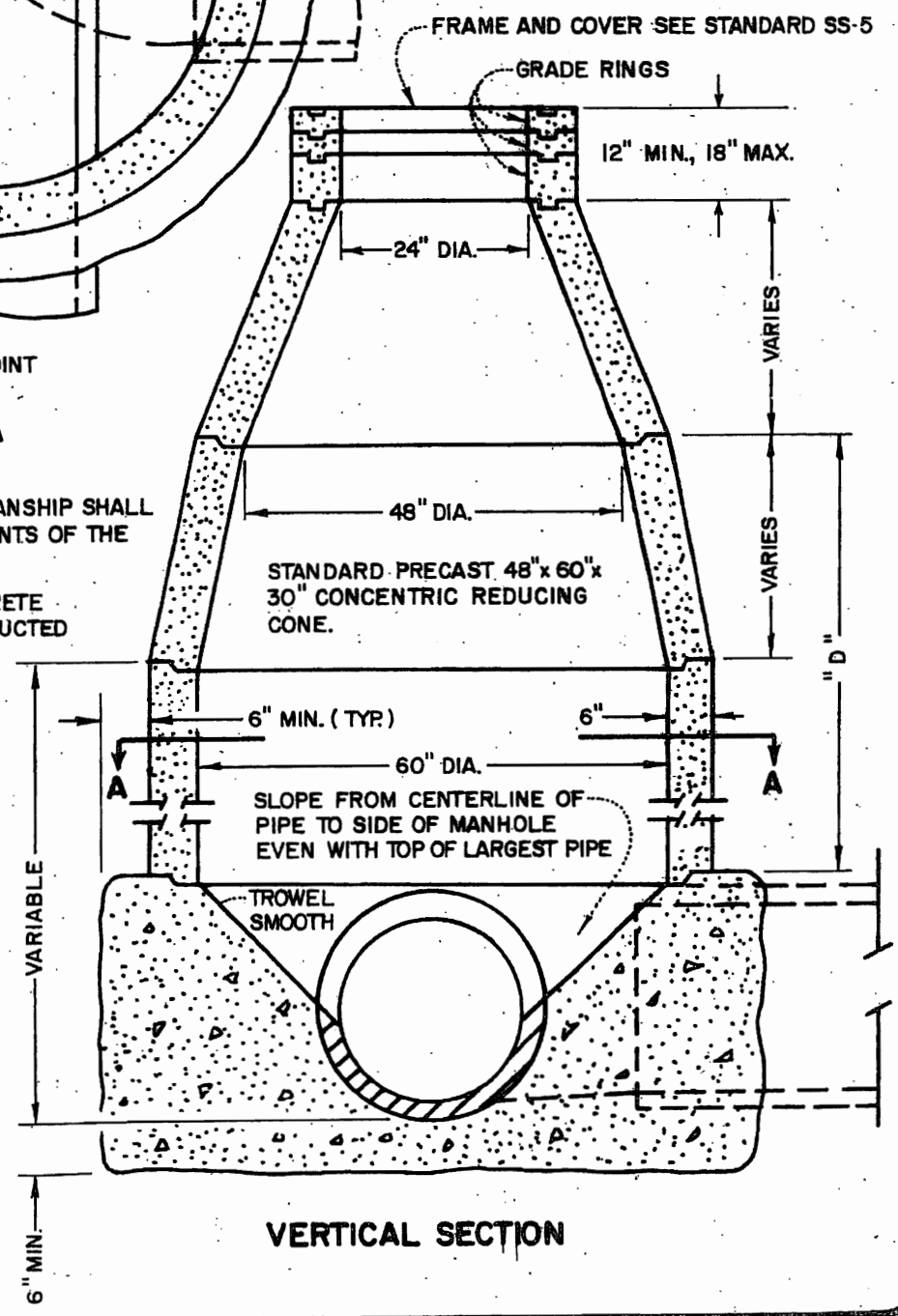

VERTICAL SECTION

CITY OF Lindsay
DEPARTMENT OF PUBLIC WORKS

60" MANHOLE

MARK	DATE	REVISION

Engineering Standard
Approved [signature]
Date 9/13/79

SS-2

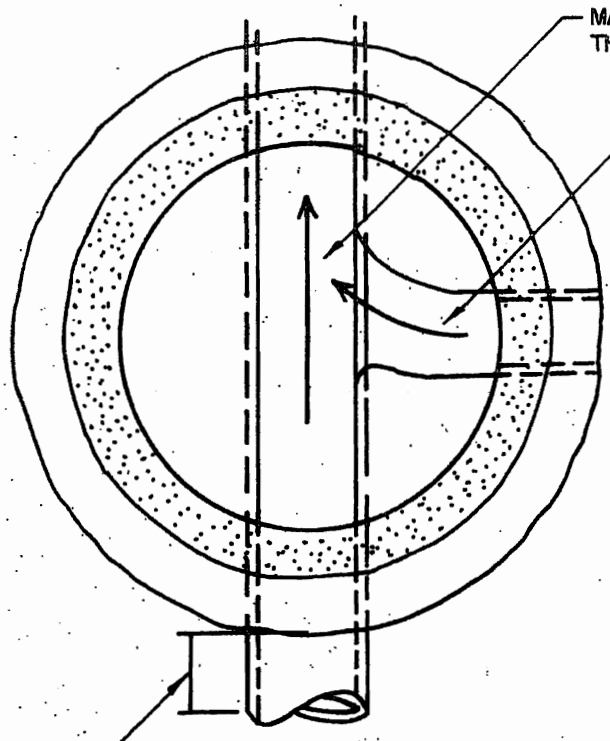

SECTION A-A

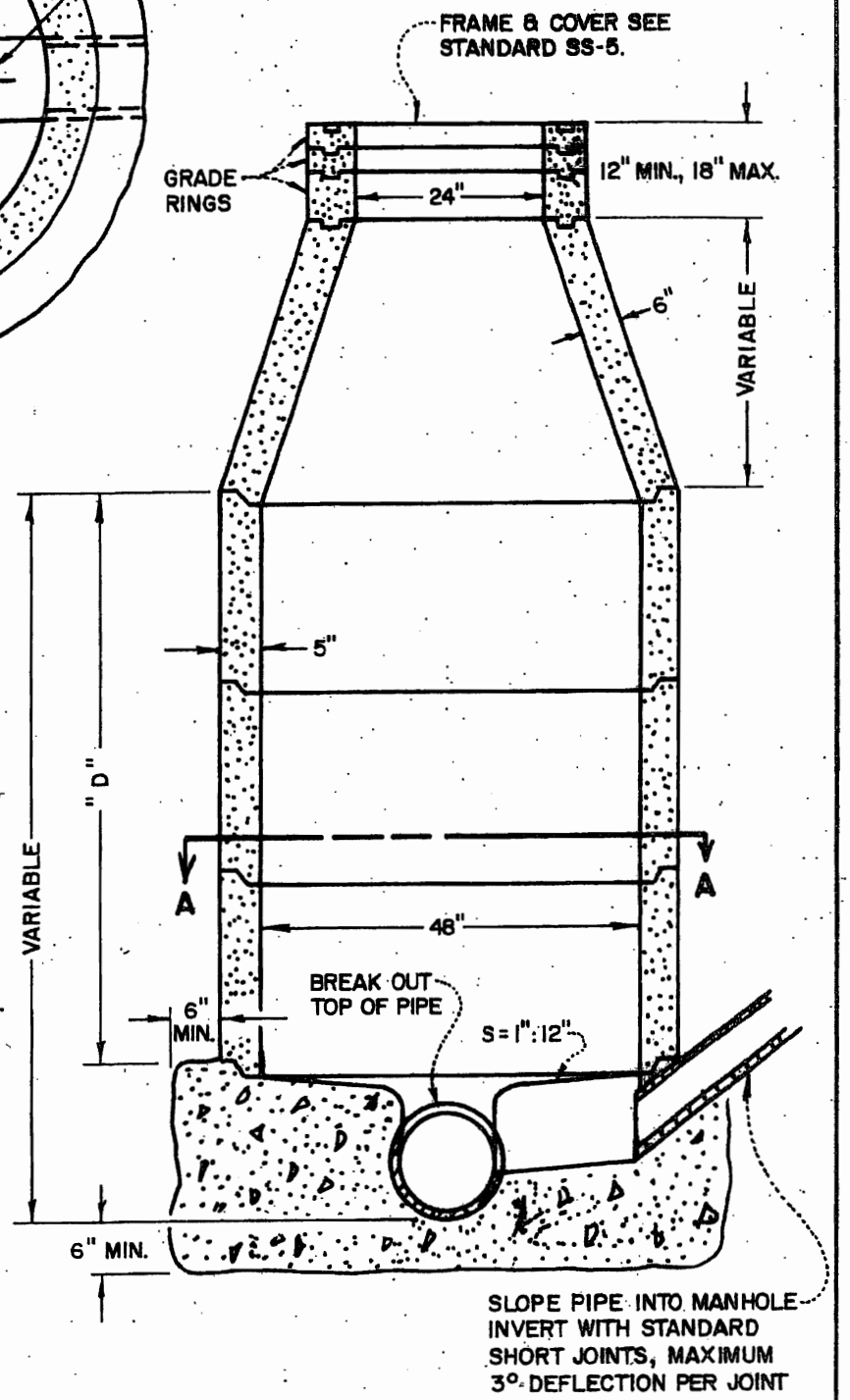

VERTICAL SECTION

NOTES:

1. ALL MATERIALS AND WORKMANSHIP SHALL CONFORM TO THE REQUIREMENTS OF THE STANDARD SPECIFICATIONS.
2. PRECAST REINFORCED CONCRETE MANHOLE SHALL BE CONSTRUCTED IN ACCORDANCE WITH THE PROVISIONS OF A.S.T.M. DESIGNATION C-478.
3. ALL CONCRETE SHALL BE 2500 p.s.i. (5 SACK MIX.)

CITY OF *Lindsay*
DEPARTMENT OF PUBLIC WORKS

DROP MANHOLE

MARK	DATE	REVISION

Engineering Standard
Approved [signature]
Date 9/14/79

SS-3

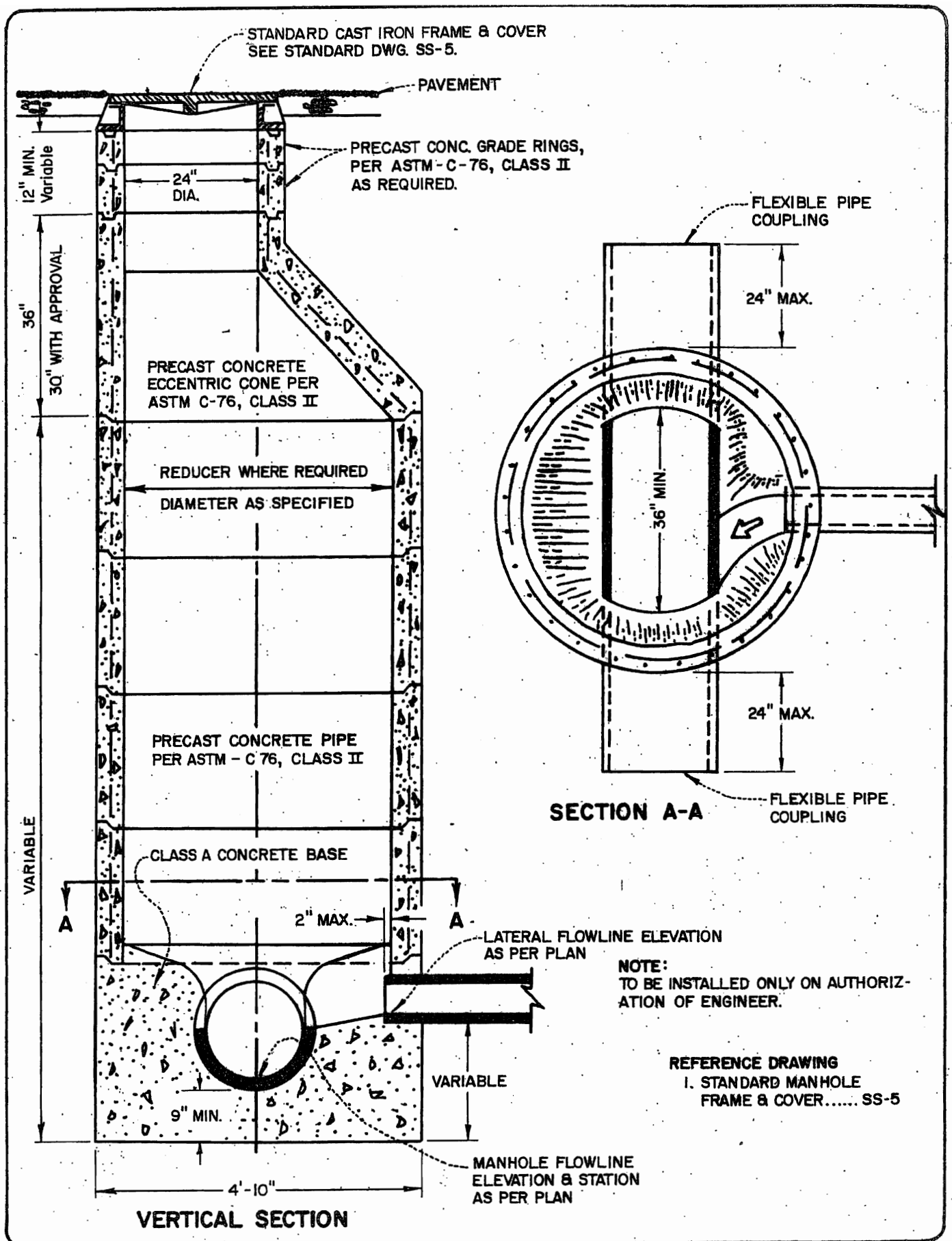

NOTE:
TO BE INSTALLED ONLY ON AUTHORIZATION OF ENGINEER.

REFERENCE DRAWING
1. STANDARD MANHOLE FRAME & COVER..... SS-5

CITY OF *Lindsay*
DEPARTMENT OF PUBLIC WORKS

ECCENTRIC MANHOLE

MARK	DATE	REVISION

Engineering Standard
Approved
Date 9/13/79

SS-4

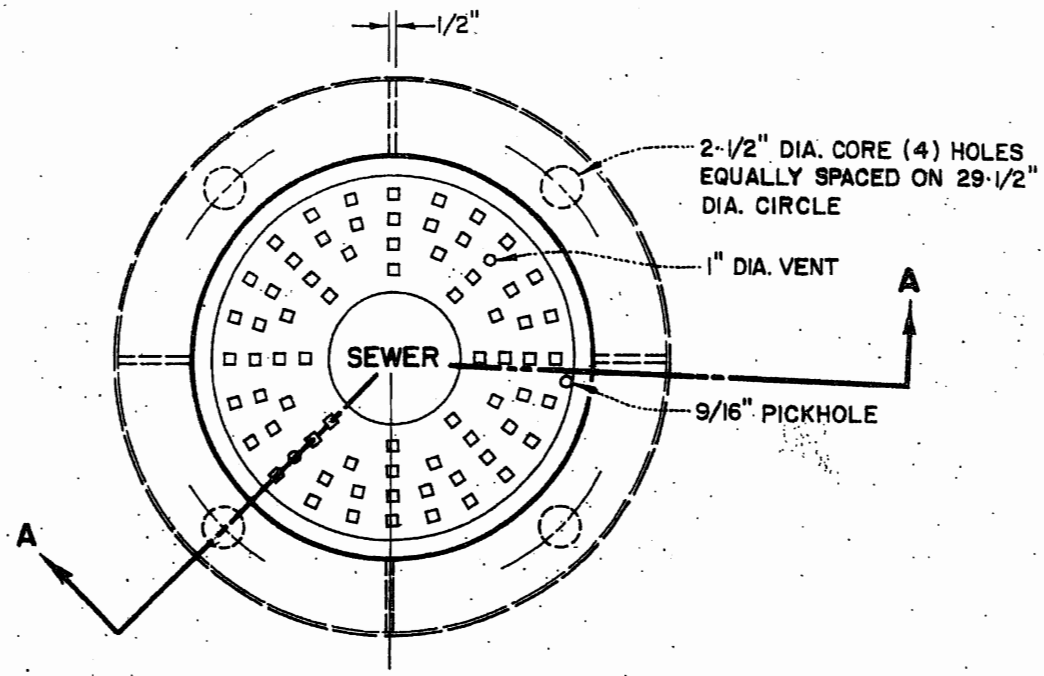

PLAN VIEW

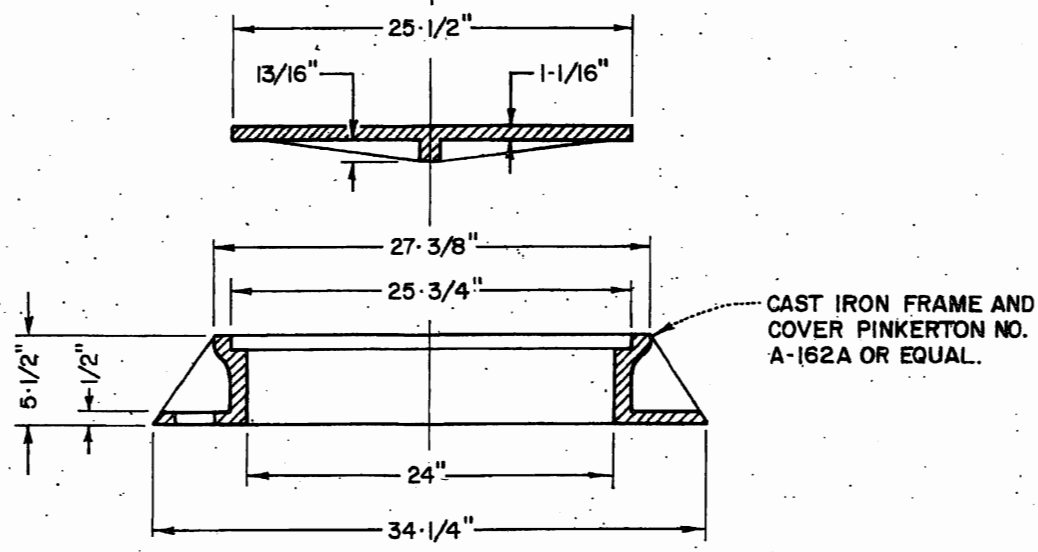

SECTION A-A

CITY OF Lindsay
DEPARTMENT OF PUBLIC WORKS

MANHOLE FRAME AND COVER

MARK	DATE	REVISION

Engineering Standard
Approved [signature]
Date 9/13/79

SS-5

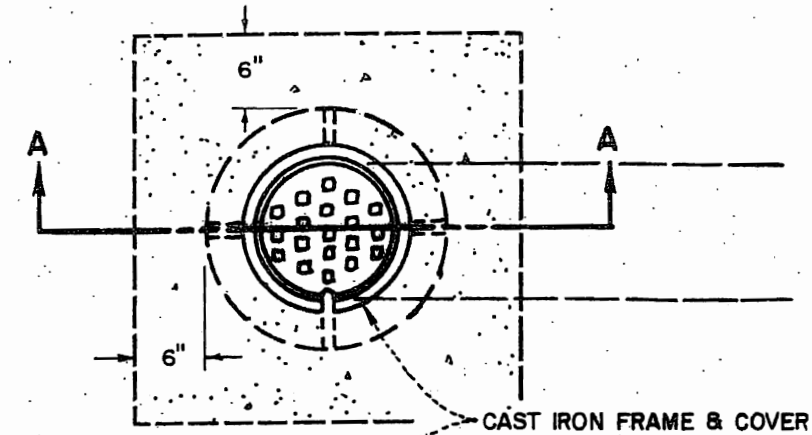

PLAN

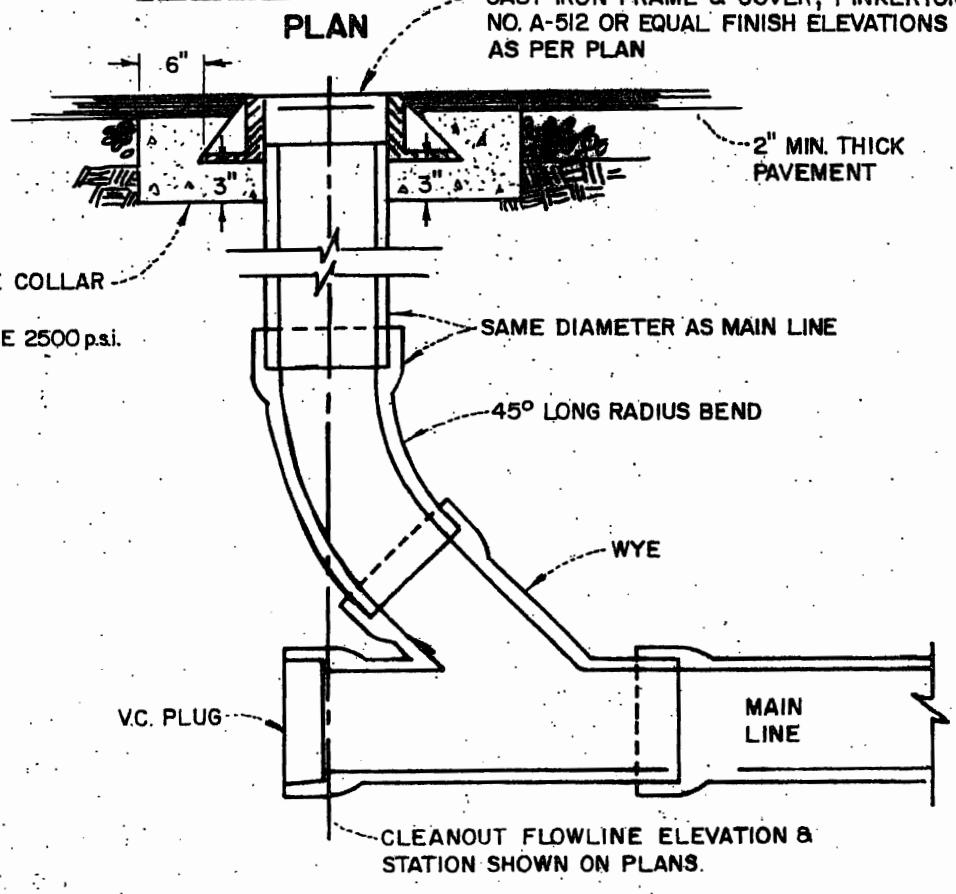

SECTION A-A

CITY OF Lindsay
DEPARTMENT OF PUBLIC WORKS

TERMINAL CLEANOUT

MARK	DATE	REVISION

Engineering Standard
Approved [signature]
Date 9/14/79

SS-6

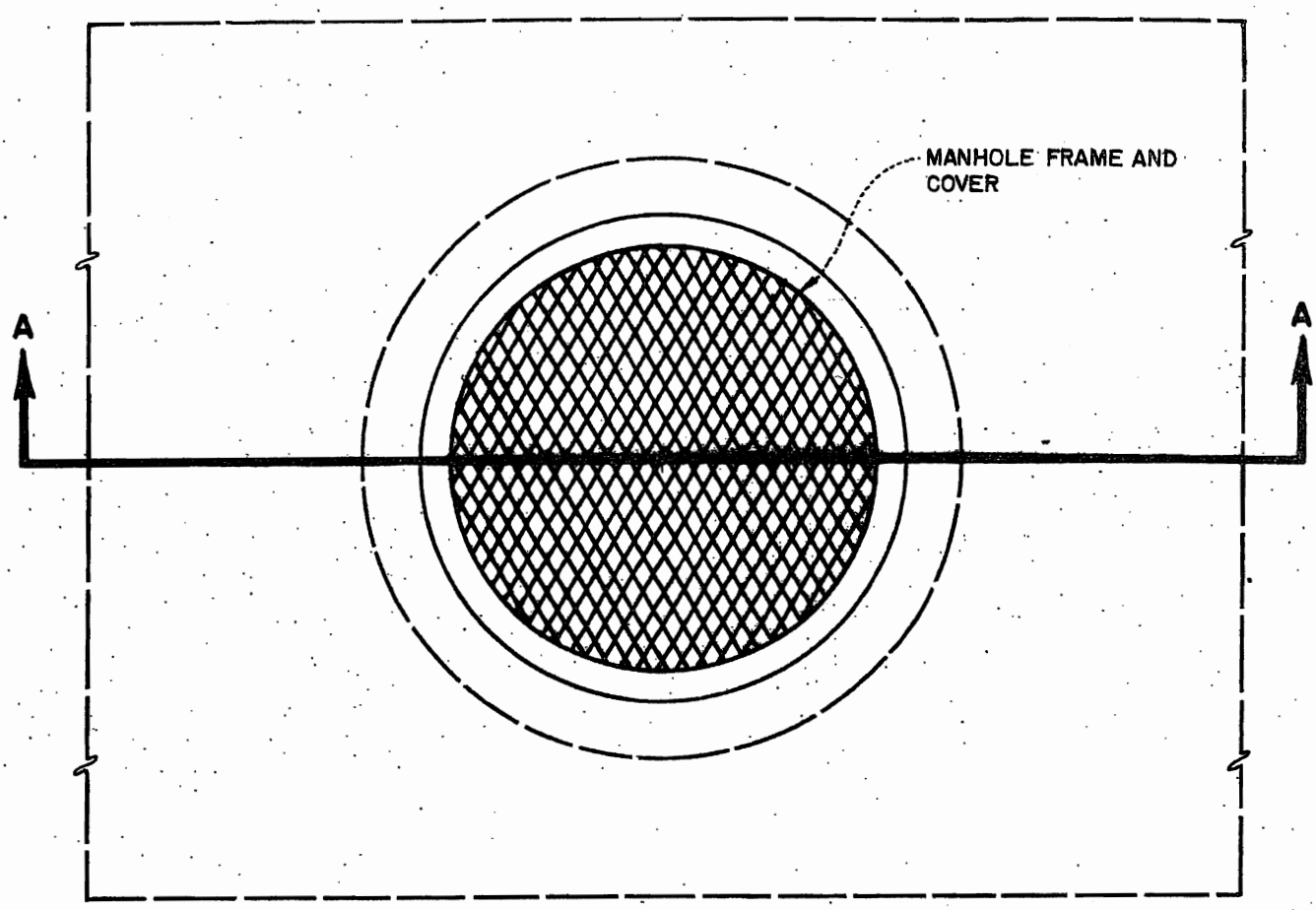

PLAN

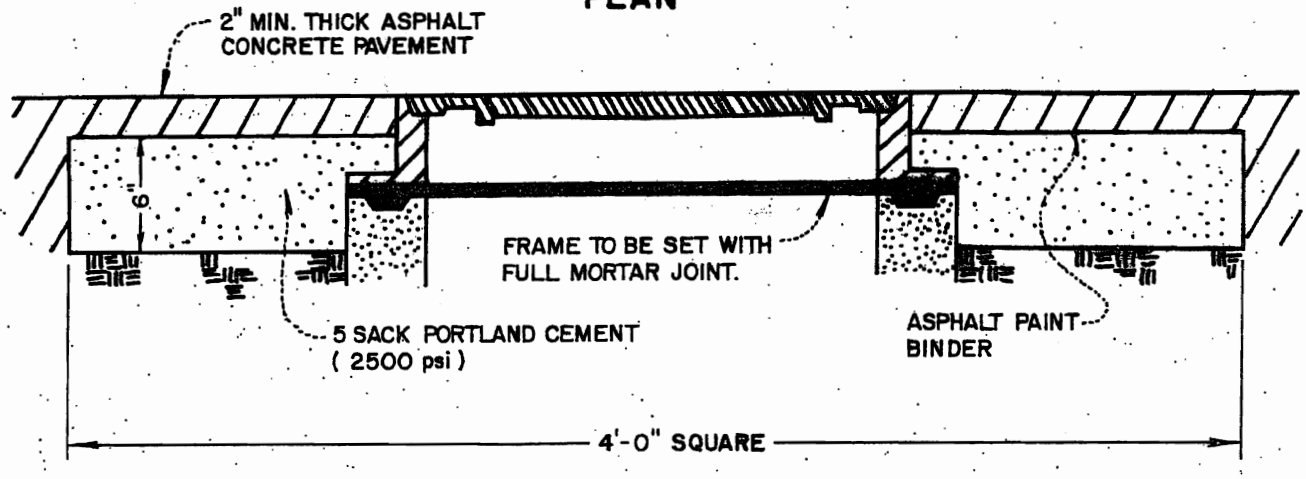

SECTION A-A

NOTE:
ALL MATERIALS AND WORKMANSHIP SHALL CONFORM TO THE REQUIREMENTS OF THE STANDARD SPECIFICATIONS.

CITY OF *Lindsay*
DEPARTMENT OF PUBLIC WORKS

MANHOLE FRAME AND COVER ADJUSTMENT DETAIL

MARK	DATE	REVISION

Engineering Standard
Approved [signature]
Date July 9, 1979

SS-7

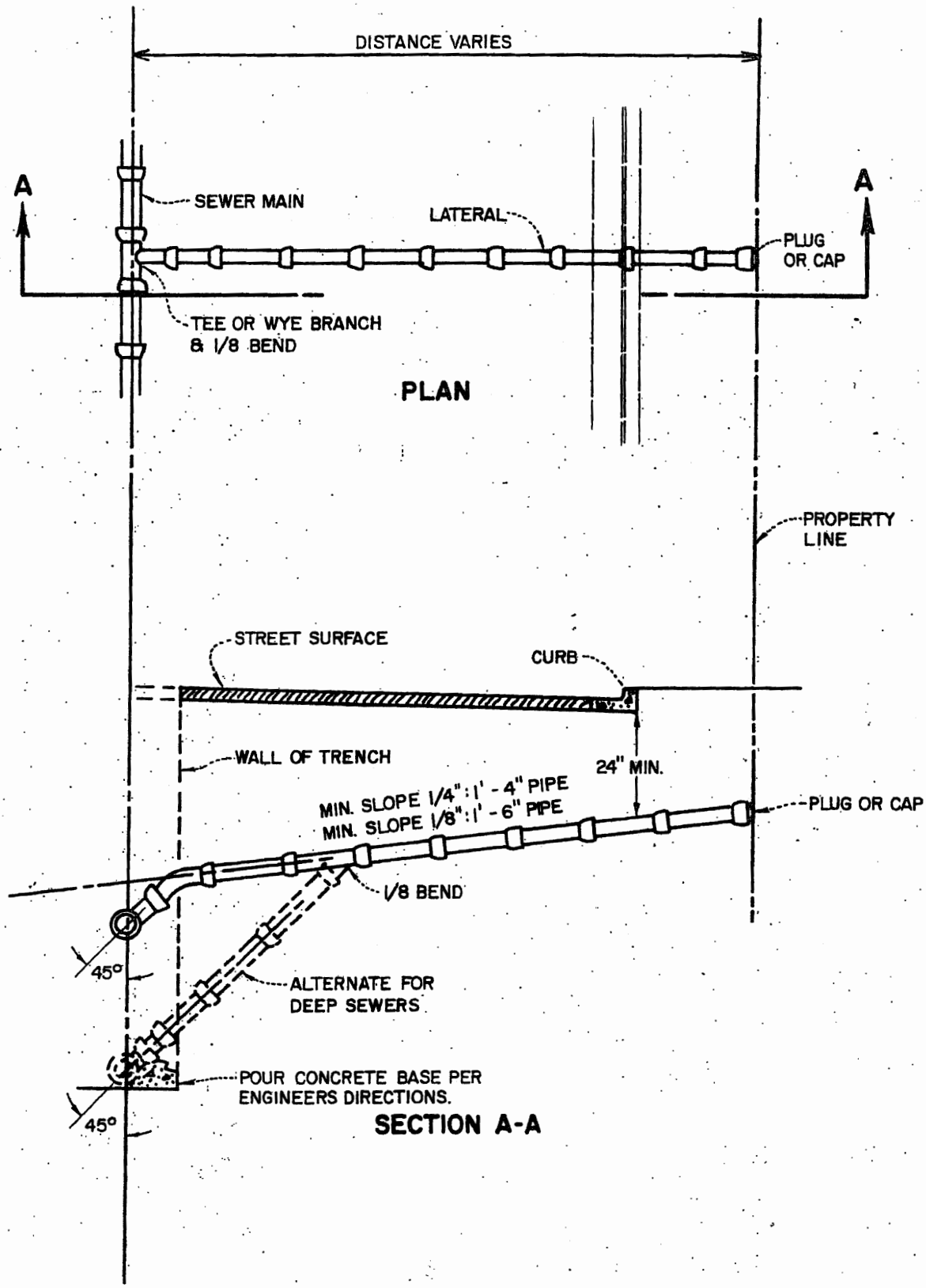

CITY OF Lindsay
DEPARTMENT OF PUBLIC WORKS

LATERAL

MARK	DATE	REVISION

Engineering Standard
Approved [signature]
Date 9/14/79

SS-8

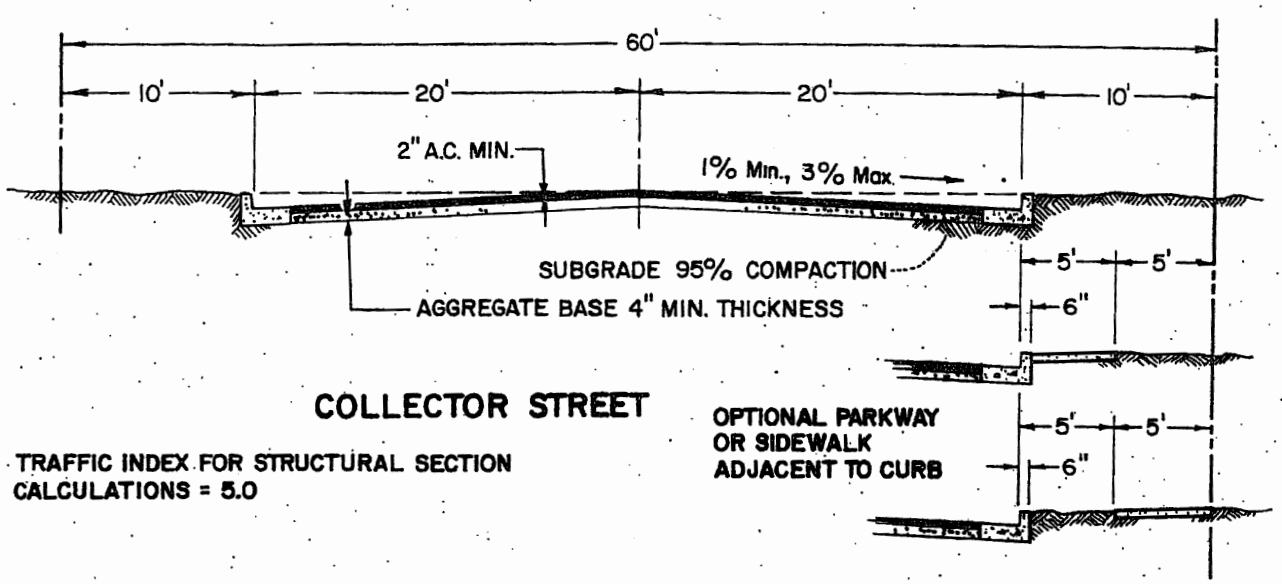

COLLECTOR STREET

TRAFFIC INDEX FOR STRUCTURAL SECTION CALCULATIONS = 5.0

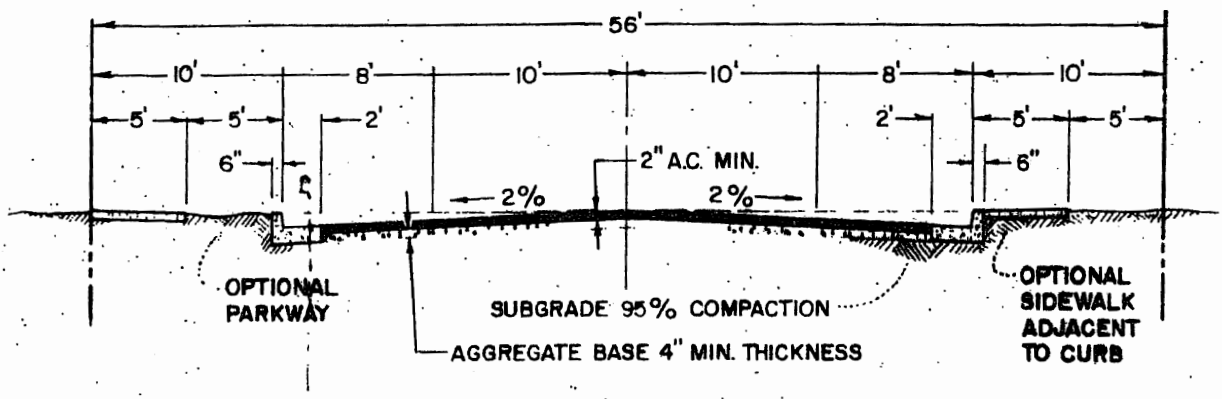

LOCAL & CUL-DE-SAC STREET

TRAFFIC INDEX FOR STRUCTURAL SECTION CALCULATIONS = 4.0

CITY OF *Lindsay*
DEPARTMENT OF PUBLIC WORKS

LOCAL & COLLECTOR STREETS

MARK	DATE	REVISION

Engineering Standard
Approved [signature]
Date 9/13/79

ST-1A

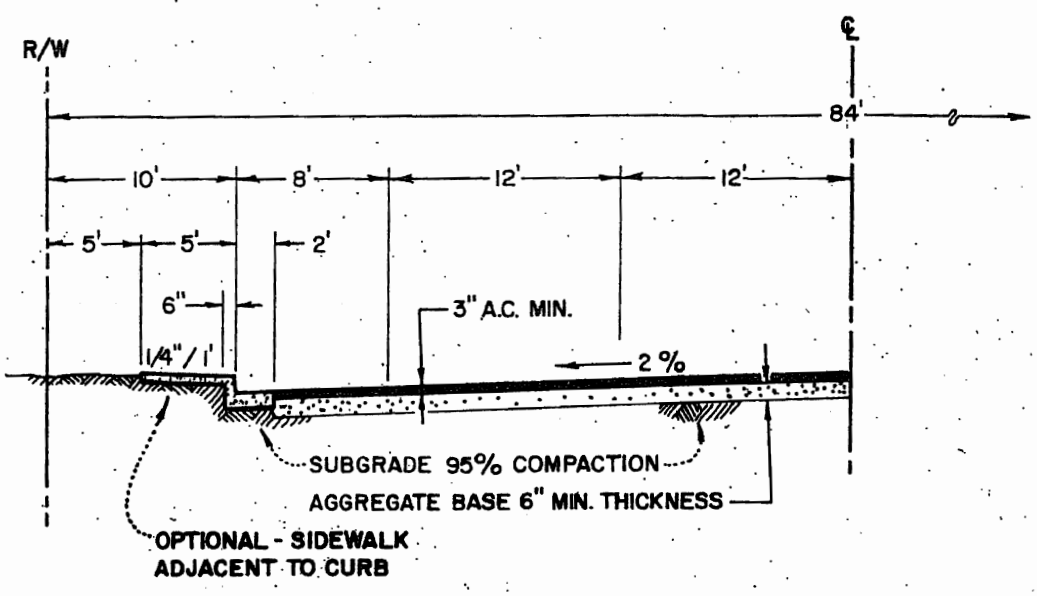

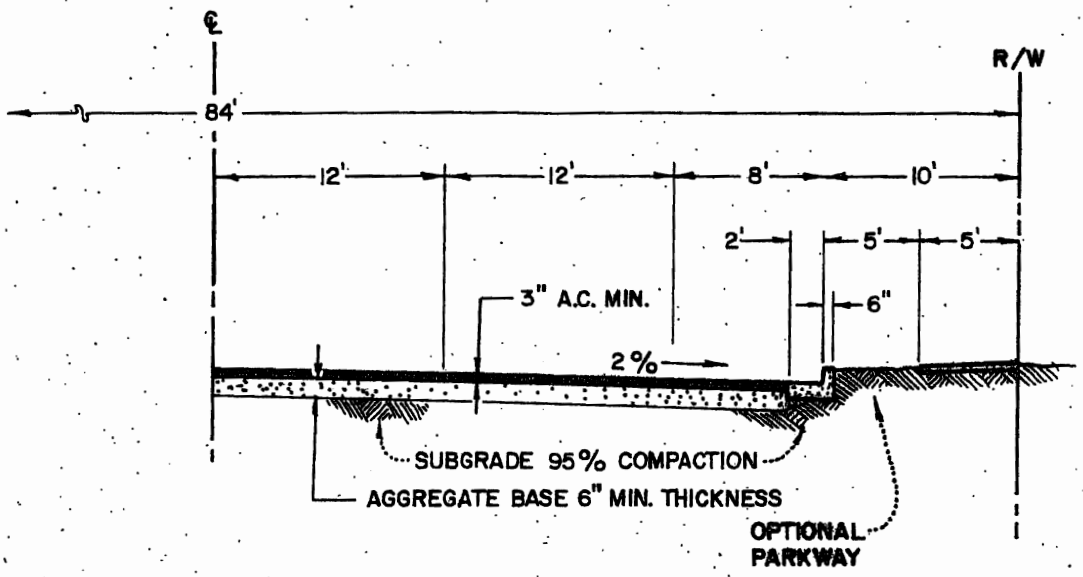

TRAFFIC INDEX FOR STRUCTURAL SECTION CALCULATIONS = 6.0

CITY OF Lindsay
DEPARTMENT OF PUBLIC WORKS

SECONDARY STREET

MARK	DATE	REVISION

Engineering Standard
Approved
Date 9/14/79

ST-1B

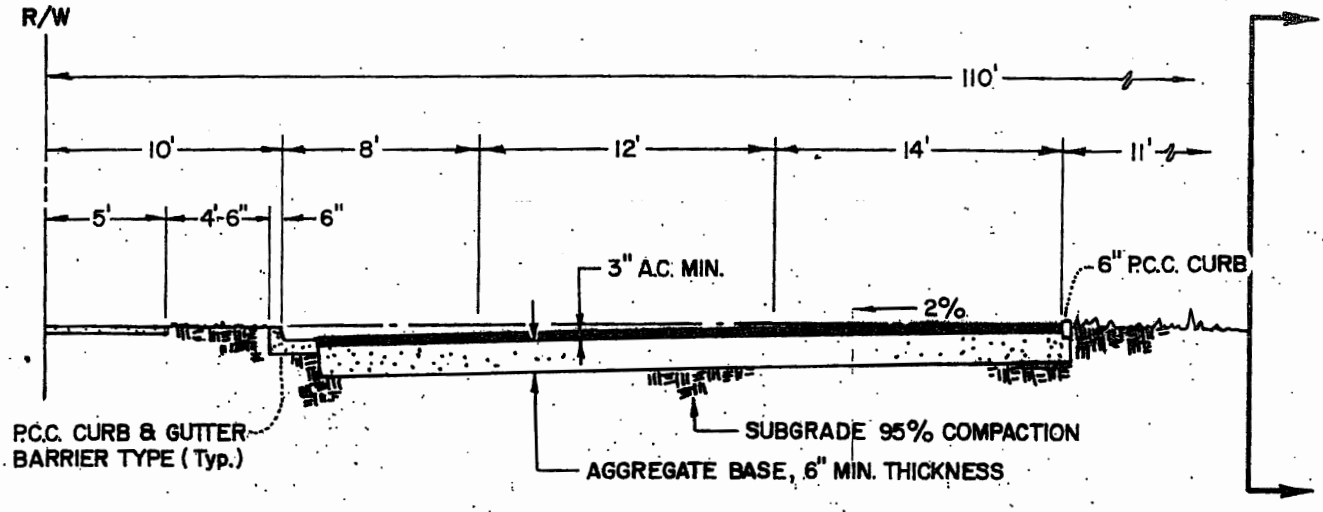

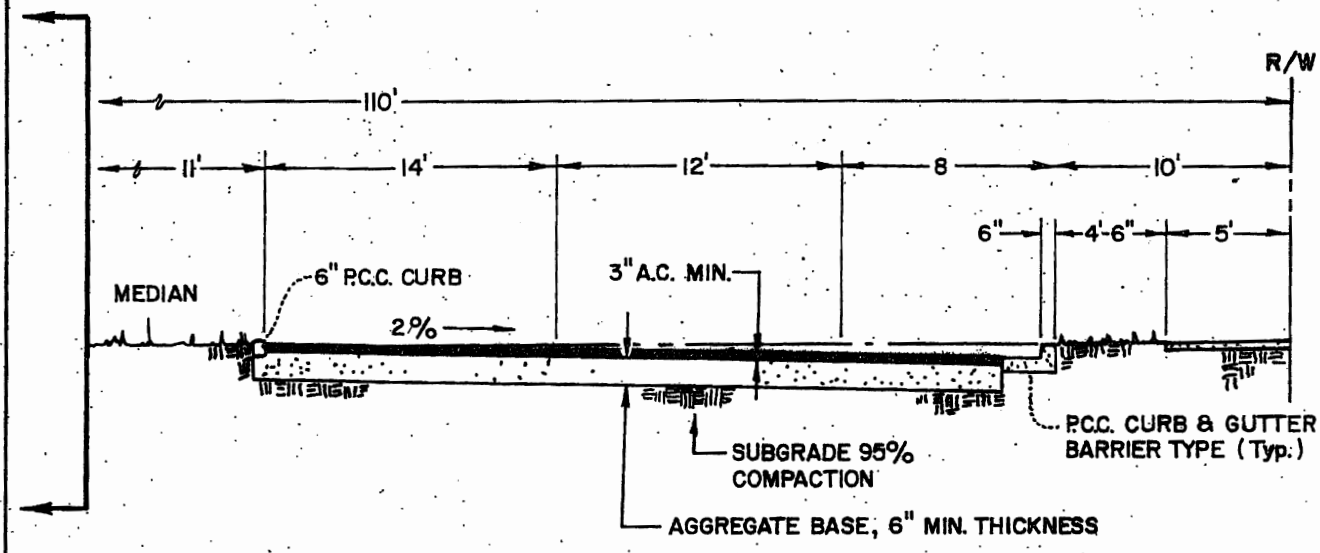

TRAFFIC INDEX FOR STRUCTURAL SECTION CALCULATIONS = 7.0

CITY OF *Lindsay*
DEPARTMENT OF PUBLIC WORKS

MAJOR ARTERIAL STREET

MARK	DATE	REVISION

Engineering Standard
Approved: [signature]
Date: 9/13/79

ST-1C

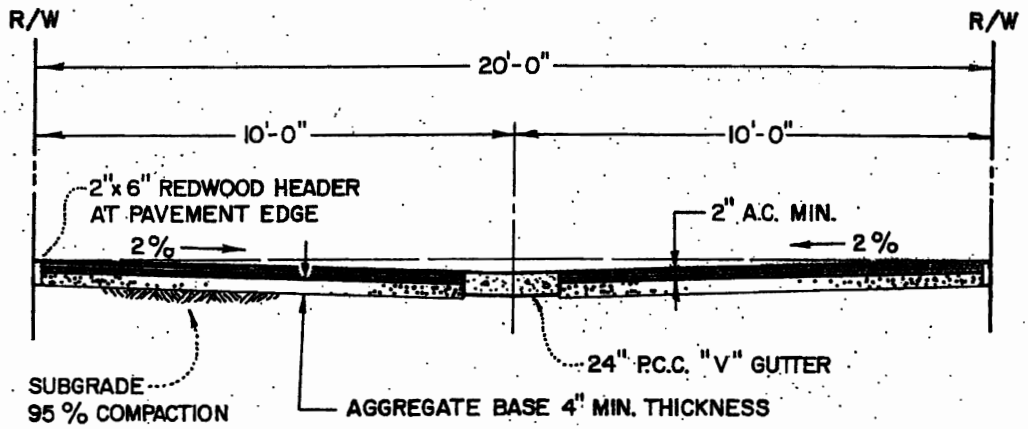

TRAFFIC INDEX FOR STRUCTURAL SECTION CALCULATIONS = 5.0

CITY OF *Lindsay*
DEPARTMENT OF PUBLIC WORKS

ALLEY

MARK	DATE	REVISION

Engineering Standard
Approved
Date 9/14/79

ST-1D

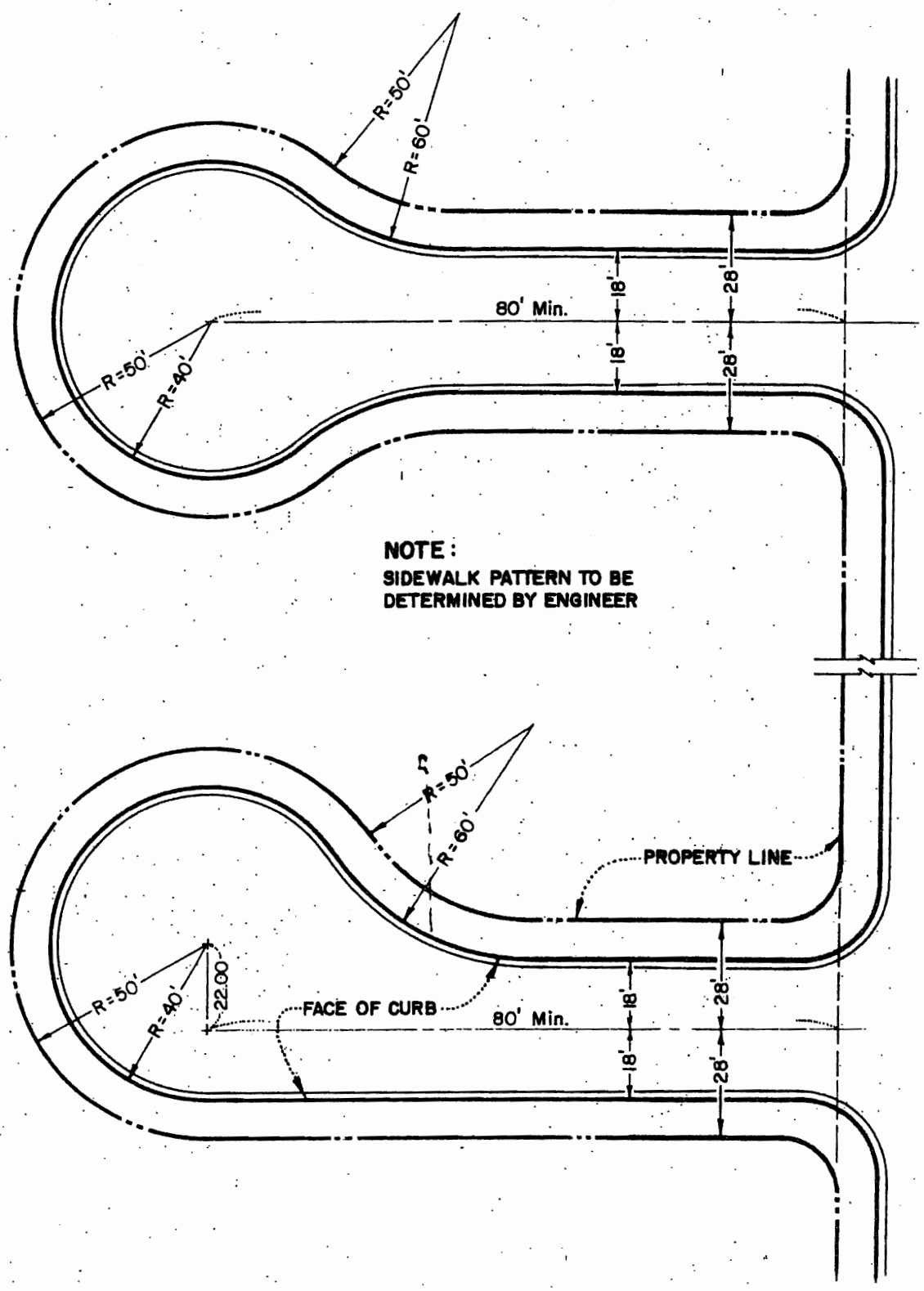

CITY OF Lindsay
DEPARTMENT OF PUBLIC WORKS

CUL-DE-SAC

MARK	DATE	REVISION

Engineering Standard
Approved
Date 9/13/79

ST-2

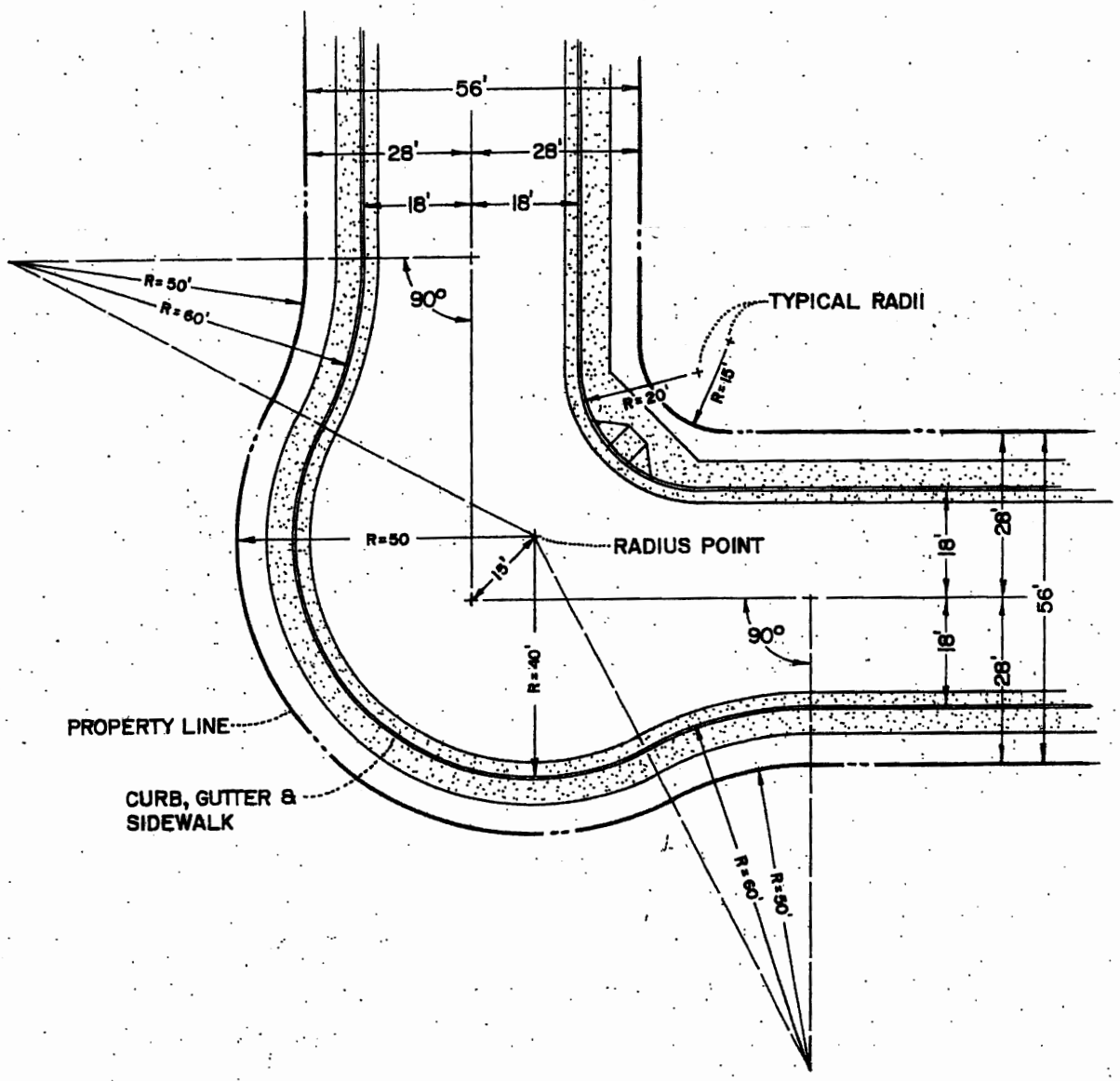

CITY OF *Lindsay*
DEPARTMENT OF PUBLIC WORKS

STREET BULB CONNECTION

MARK	DATE	REVISION

Engineering Standard

Approved: [signature]

Date: 9/13/79

ST-3

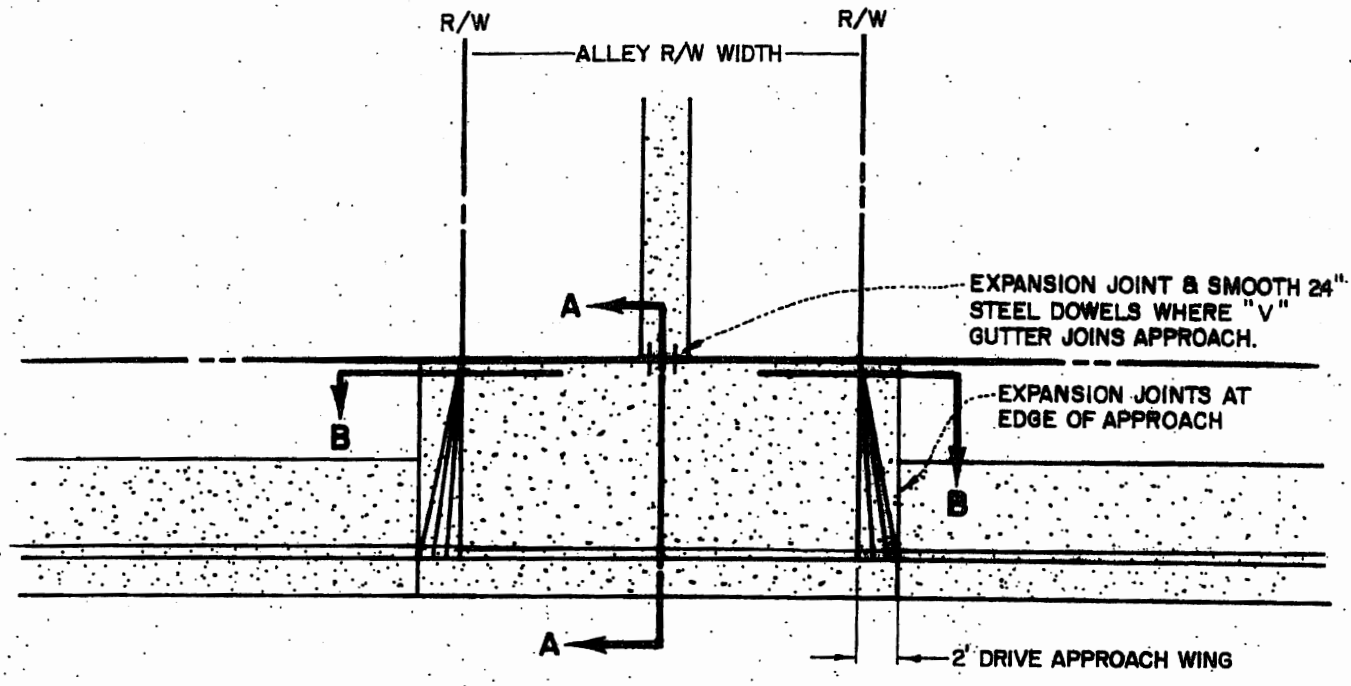

PLAN

NOTES:

1. CONCRETE SHALL BE 2500 p.s.i. (5 SACK MIX.)
2. APPROACH SHALL HAVE HEAVY BROOM FINISH.
3. CURING COMPOUND SHALL BE APPLIED AS APPROVED BY THE CITY ENGINEER.

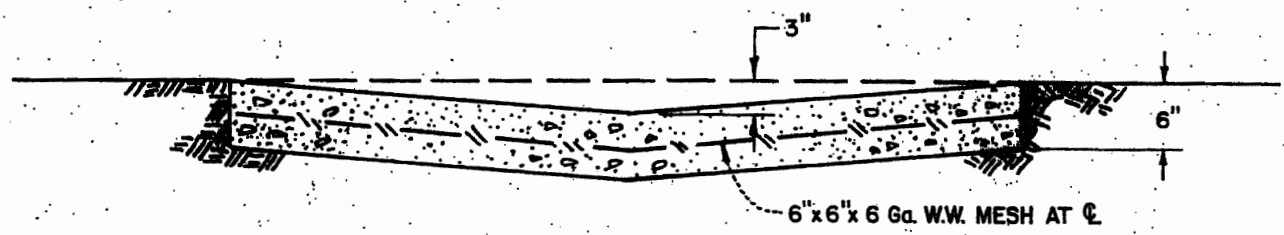

SECTION B-B

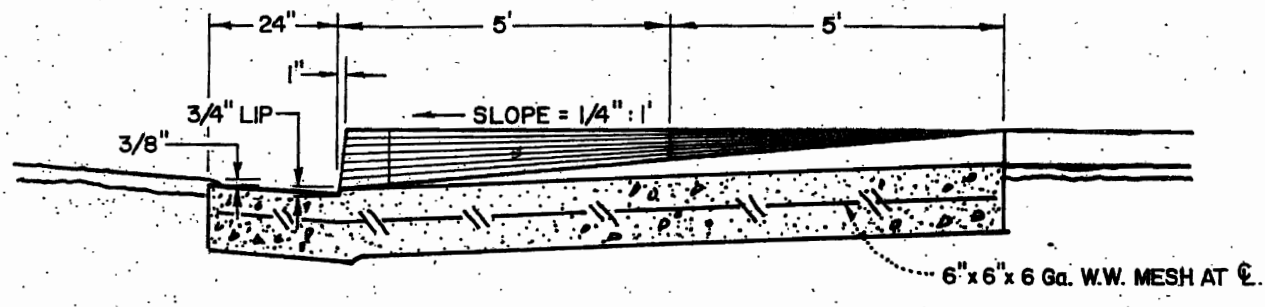

SECTION A-A

CITY OF Lindsay
DEPARTMENT OF PUBLIC WORKS

ALLEY APPROACH

MARK	DATE	REVISION

Engineering Standard
Approved
Date 9/13/79

ST-4

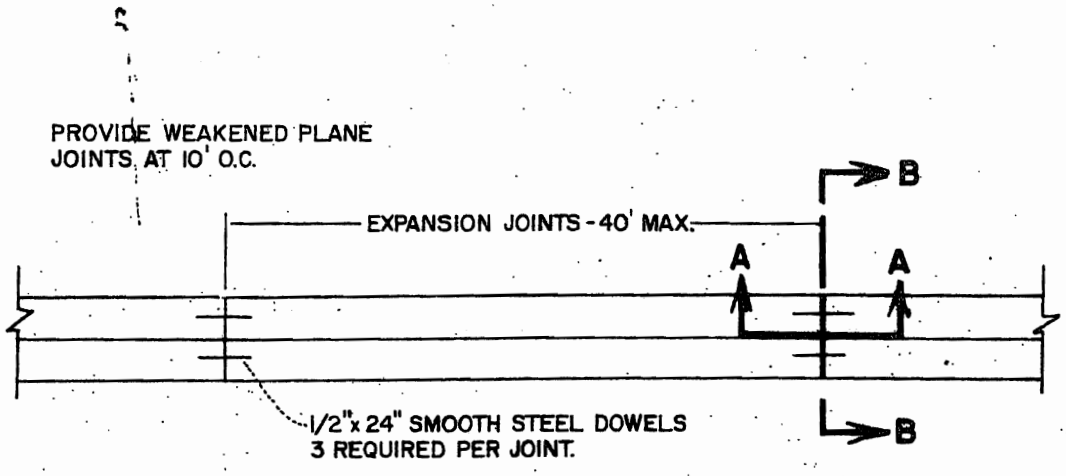

PLAN

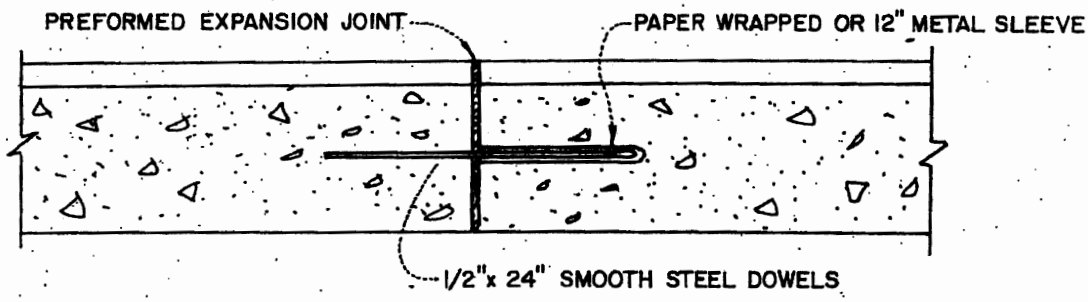

SECTION A-A

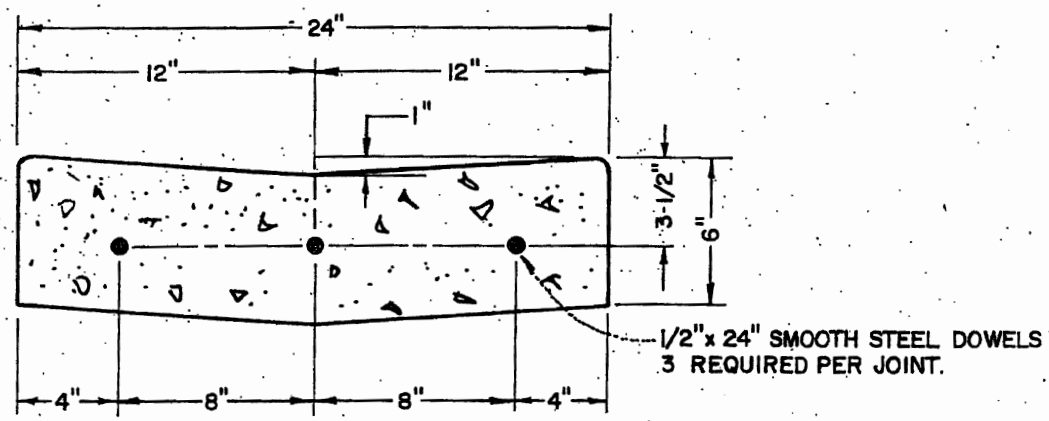

SECTION B-B

NOTES:

1. CONCRETE SHALL BE 2500 p.s.i. (5 SACK MIX)
2. GUTTER SHALL HAVE LIGHT BROOM FINISH.
3. FINISHED SURFACES SHALL BE TREATED WITH A CURING COMPOUND APPROVED BY THE CITY ENGINEER.

CITY OF *Lindsay*
DEPARTMENT OF PUBLIC WORKS

ALLEY "V" GUTTER

MARK	DATE	REVISION

Engineering Standard
Approved
Date 9/14/79

ST-5

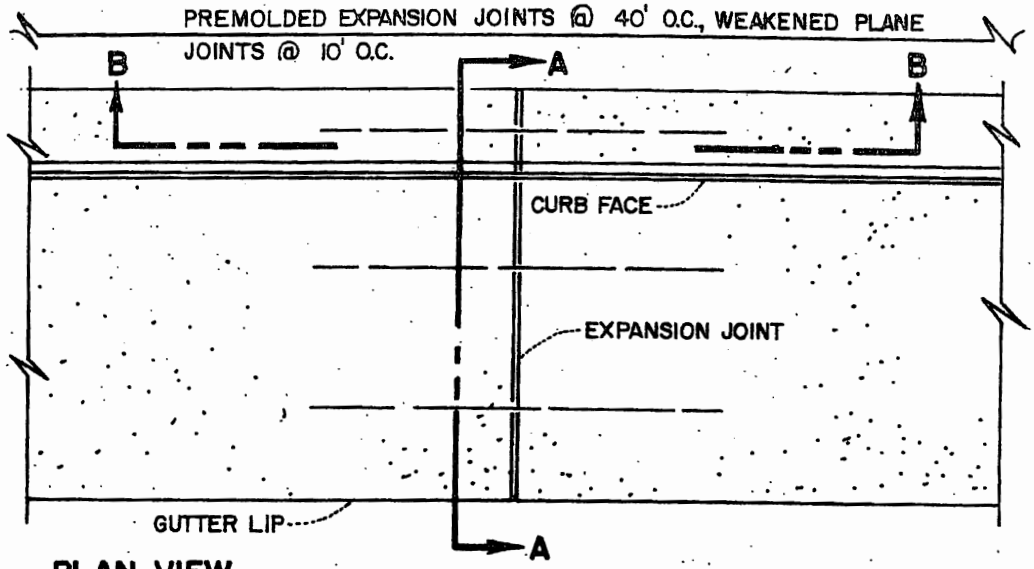

PLAN VIEW

NOTES:

CONCRETE SHALL BE 2500 p.s.i. (5 Sack Mix)

TOP AND FACE OF CURB SHALL HAVE A LIGHT BRUSH FINISH, GUTTER SHALL HAVE A LIGHT BROOM FINISH.

FINISHED SURFACES SHALL BE TREATED WITH A CURING COMPOUND APPROVED BY CITY ENGINEER.

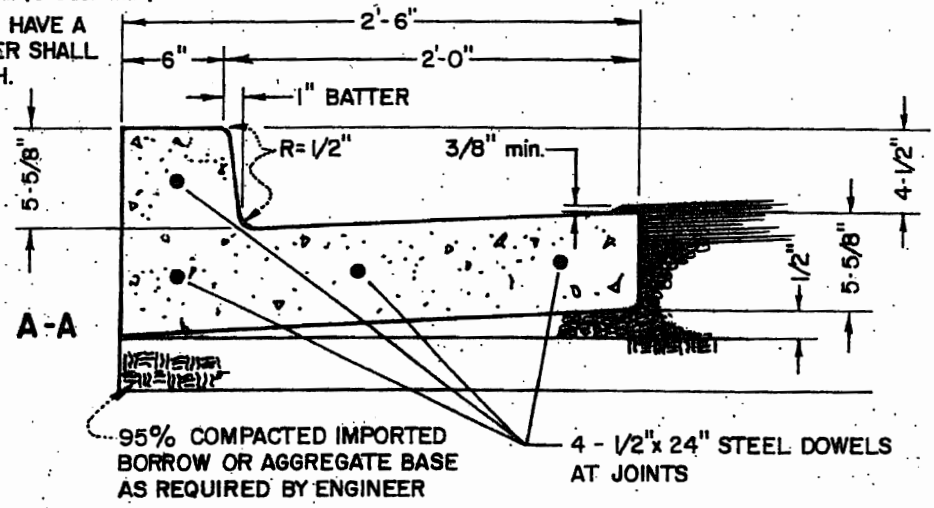

SECTION A-A

NOTE:

CONTRACTOR SHALL FILL AREA BETWEEN NEW GUTTER AND EXISTING STREET SURFACE WITH SAME TYPE OF MATERIAL AS EXISTING STREET TO A MINIMUM SECTION OR 2" ASPHALT CONCRETE TYPE B OVER 4" CLASS II BASE OR AS DIRECTED BY ENGINEER. APPLY PRIME COAT TO NEW GUTTER AND EXISTING STREET AS DIRECTED BY ENGINEER.

NOTE:

CURB & GUTTER SHALL HAVE A GRADIENT OF 0.20% MINIMUM.

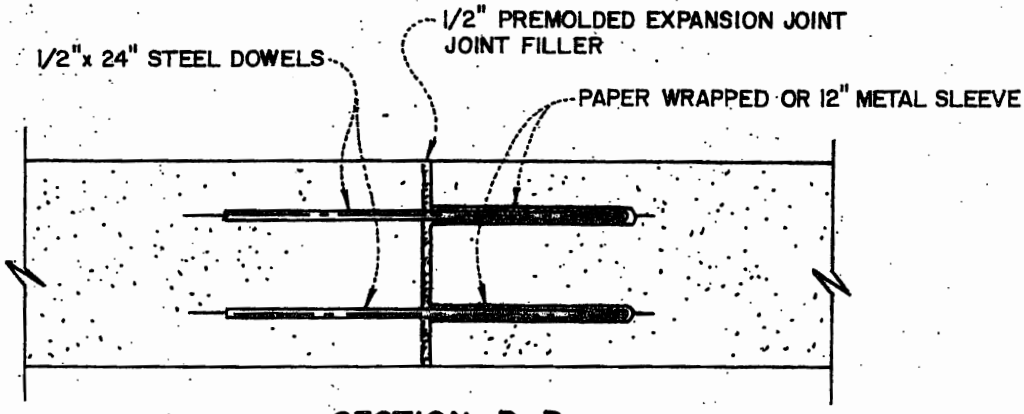

SECTION B-B

CITY OF *Lindsay*
DEPARTMENT OF PUBLIC WORKS

BARRIER TYPE CURB AND GUTTER

MARK	DATE	REVISION

Engineering Standard
Approved: [signature]
Date 9/13/79

ST-6

Lindsay
All-America City

City of Lindsay

Enterprise Zone

DEPARTMENT OF CITY SERVICES

P.O. Box 369 — Lindsay, California 93247 — 150 N. Mirage Ave.
559 • 562 • 5945
559 • 562 • 5748 fax

City of Lindsay
Development Standard Addendum
May 2006

Development Standard No. ST-6, Barrier Type Curb and Gutter.

The following items shall be considered City of Lindsay acceptable construction practice and allowed for the construction of curb and gutter.

This applies to machine pour curb and gutter only. Allowances can be made for form and stake curb and gutter, but will be reviewed on a project by project basis.

- Steel dowels are required at cold joints only. ½" diameter x 24" long embedded 12" into each section of curb and gutter. A total of 4 dowels (2 in curbing, 2 in gutter pan) are required. Expansion felt shall be required at cold joints also.
- Weakened plane joints (deep joints) shall be required at 20' o.c.; the definition of weakened plane joints shall be 1" minimum depth and shall be finished with a scoring tool leaving the edges rounded.
- "Beauty Mark" joints (surface joints) shall be required at 10' o.c.
- Expansion felt may be omitted from each driveway location as directed by the City representative.
- "0" (zero) lip is required at all handicap curb depressions.
- ½" lip, maximum, is required at all driveway depressions.

ROLL TYPE GURB AND GUTTER

FOR USE ONLY IN AREAS OF A PREDOMINANCE OF ROLL TYPE CURB & GUTTER AND ONLY AT THE DIRECTION OF THE CITY OF LINDSAY.

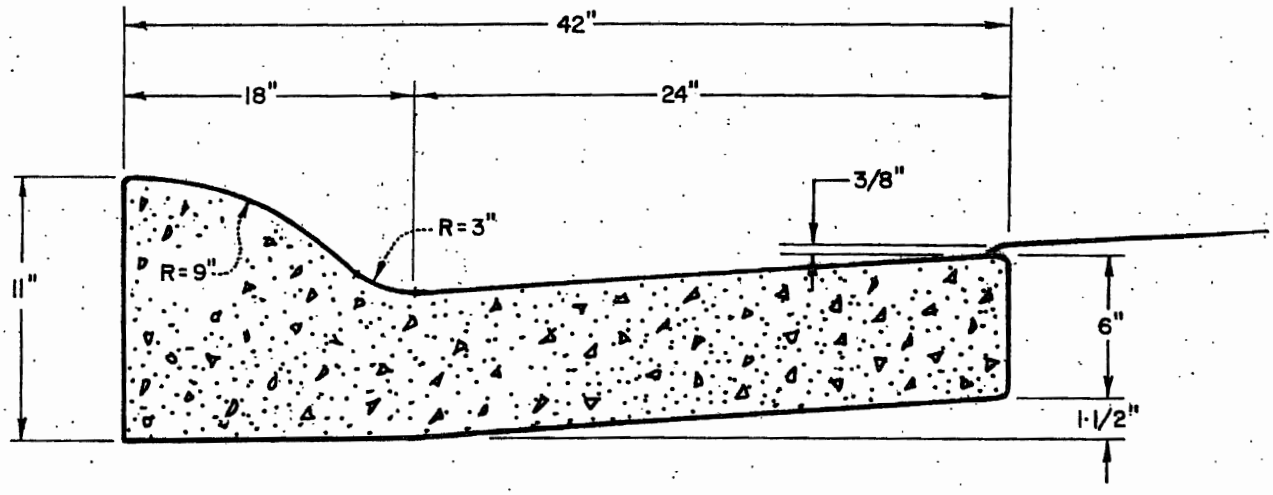

SECTIONAL VIEW

NOTES:

1. CONCRETE WORK SHALL BE 2500 p.s.i. DESIGN (5 SACK MIX)
2. ALL CONCRETE SHALL HAVE A LIGHT BROOM FINISH.
3. 1/2" EXPANSION JOINT AT END OF CURVE AND BEGINNING OF CURVE OF WALK RETURNS, DRIVEWAY APPROACHES AND AT INTERVALS OF 40' O.C. (MAX.)
4. WEAKENED PLANE JOINTS SHALL BE CONSTRUCTED AT 10' CENTERS AND SHALL BE A MINIMUM DEPTH OF 3/8" AND SHALL BE FINISHED WITH A SCORING TOOL LEAVING THE EDGES ROUNDED.
5. PLACE 4" OF SAND OR DECOMPOSED GRANITE GRANITE BEDDING WHERE REQUIRED BY THE CITY OF PORTERVILLE.
6. FINISHED SURFACES SHALL BE TREATED WITH CURING COMPOUND APPROVED BY CITY ENGINEER.

CITY OF Lindsay
DEPARTMENT OF PUBLIC WORKS

ROLLED TYPE CURB AND GUTTER

MARK	DATE	REVISION

Engineering Standard
Approved [illegible]
Date 9/18/79

ST-7

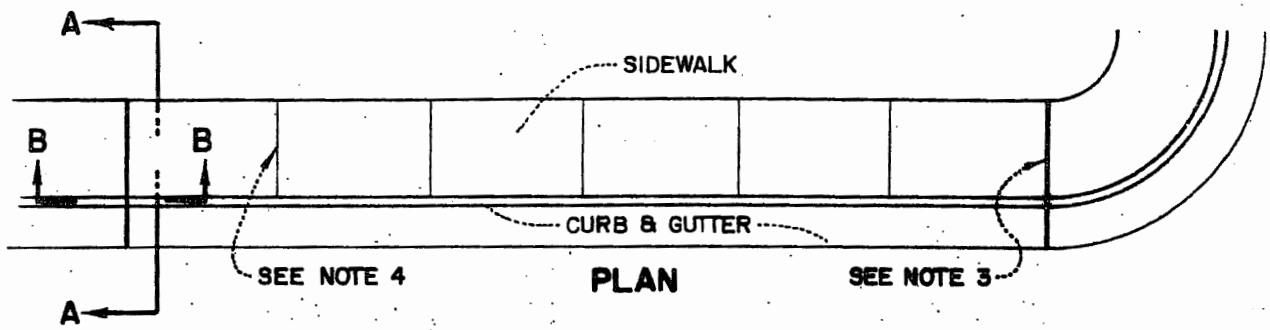

PLAN

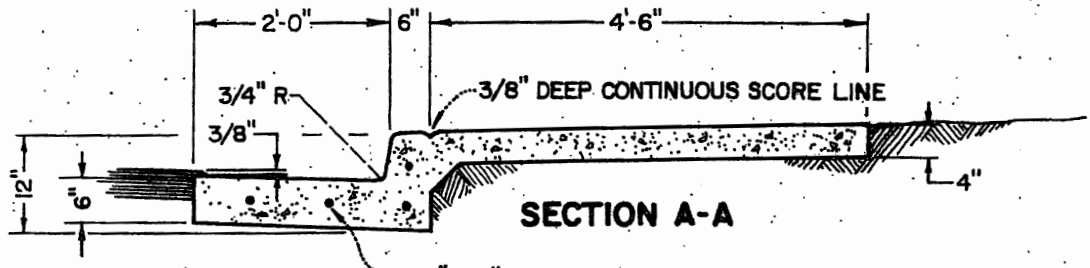

SECTION A-A

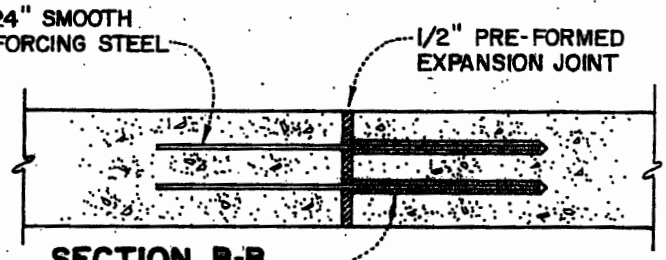

SECTION B-B

ONE END OF SMOOTH REINFORCING STEEL TO BE WRAPPED WITH BUILDING PAPER, GREASED, 10" P.V.C. OR METAL SLEEVE TO PERMIT MOVEMENT.

NOTES:

1. CONCRETE WORK SHALL BE 2500psi. (5 SACK MIX)
2. 1/2" EXPANSION JOINT AT END OF CURVE AND BEGINNING OF CURVE OF WALK RETURNS, AND AT DRIVEWAY APPROACHES, AND AT 40' O.C. MAXIMUM.
3. WEAKENED PLANE JOINTS SHALL BE CONSTRUCTED AT 10' CENTERS AND SHALL BE A MINIMUM DEPTH OF 3/8" AND SHALL BE FINISHED WITH A SCORING TOOL LEAVING THE EDGES ROUNDED.
4. FINISHED SURFACES SHALL BE TREATED WITH CURING COMPOUND APPROVED BY THE CITY ENGINEER.
5. TOP AND FACE OF CURB SHALL HAVE A LIGHT BRUSH FINISH, GUTTER SHALL HAVE A LIGHT BROOM FINISH, SIDEWALK SHALL HAVE A MEDIUM SWEAT FINISH.

NOTE:

MONOLITHIC CURB, GUTTER AND SIDEWALK MAY BE <u>REQUIRED</u> IN AREAS OF EXPANSIVE SOILS.

CITY OF *Lindsay*
DEPARTMENT OF PUBLIC WORKS

MONOLITHIC CURB, GUTTER & SIDEWALK

MARK	DATE	REVISION

Engineering Standard
Approved [signature]
Date 9/14/79

ST-8

NOTES:

1. CONCRETE SHALL BE 2500 psi. (5 SACK MIX)
2. SIDEWALK SHALL HAVE MEDIUM SWEAT FINISH.
3. CURING COMPOUND SHALL BE APPLIED AS APPROVED BY THE CITY ENGINEER.

white.

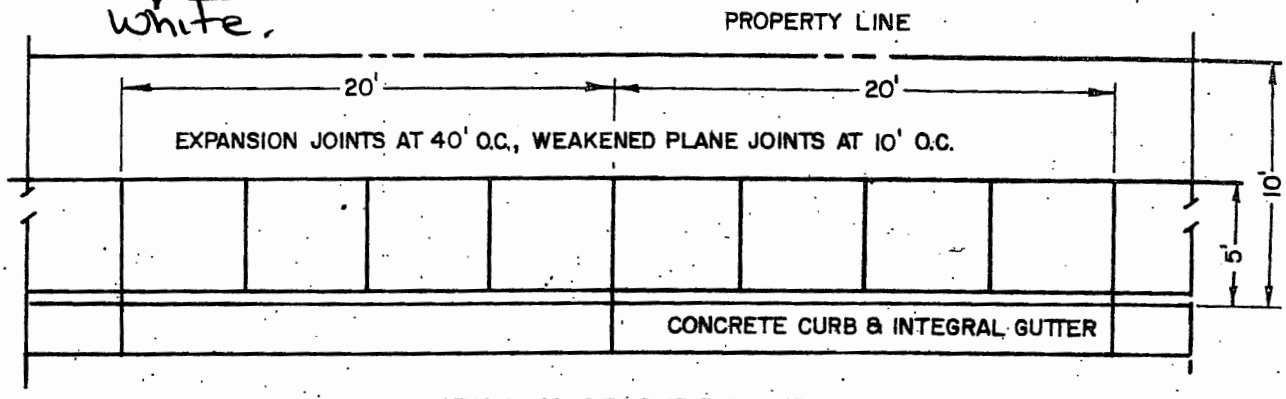

SIDEWALK AT CURB LINE

THE WALK BETWEEN EXPANSION JOINTS SHALL BE DEVIDED INTO 5' BLOCKS BY SCORING TRANSVERSELY. THE SCORING SHALL EXTEND 3/8" BELOW THE SURFACE OF THE CONCRETE SLAB AND SHALL MATCH CURB & GUTTER SCORING. COMMERCIAL SIDEWALK PATTERN SHALL EXTEND FULL WIDTH FROM PROPERTY LINE TO BACK OF CURB.

NOTE:
UTILITIES TO BE LOCATED BEHIND CURB.

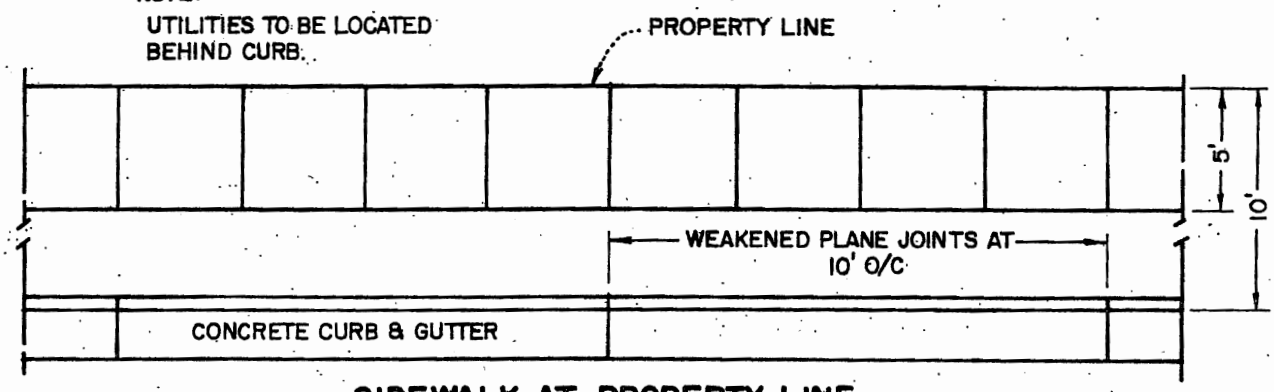

SIDEWALK AT PROPERTY LINE

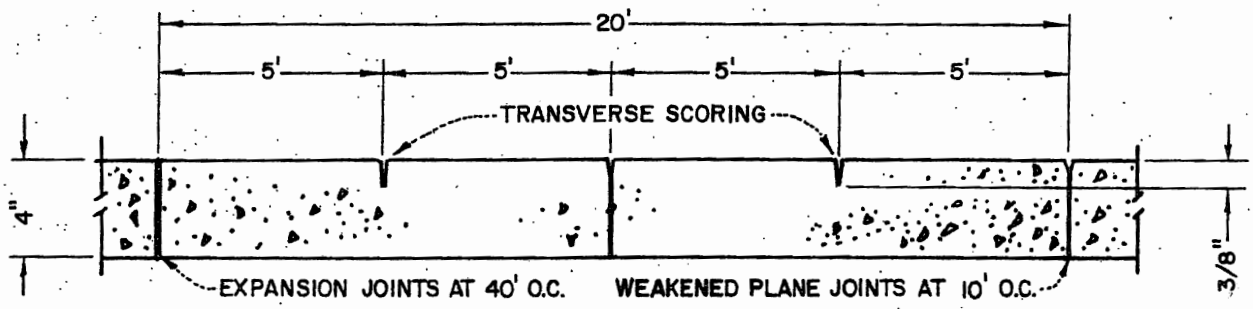

LONGITUDINAL SECTION

CITY OF Lindsay
DEPARTMENT OF PUBLIC WORKS

SIDEWALK

MARK	DATE	REVISION

Engineering Standard
Approved [signature] ST-9
Date 9/12/79

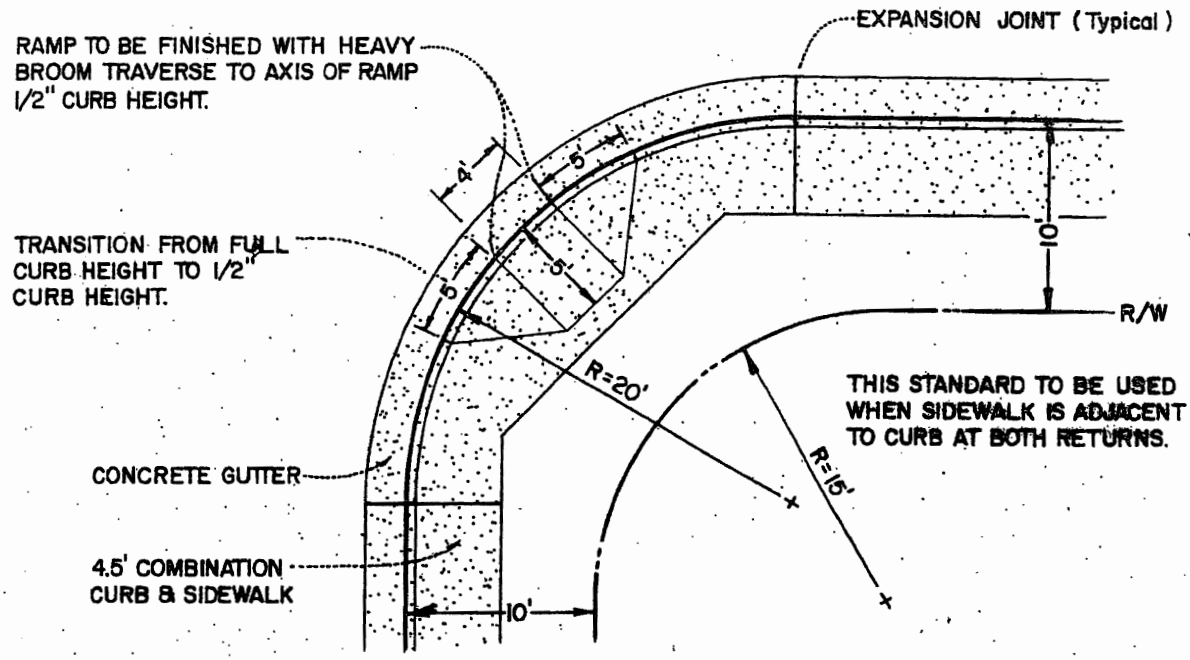

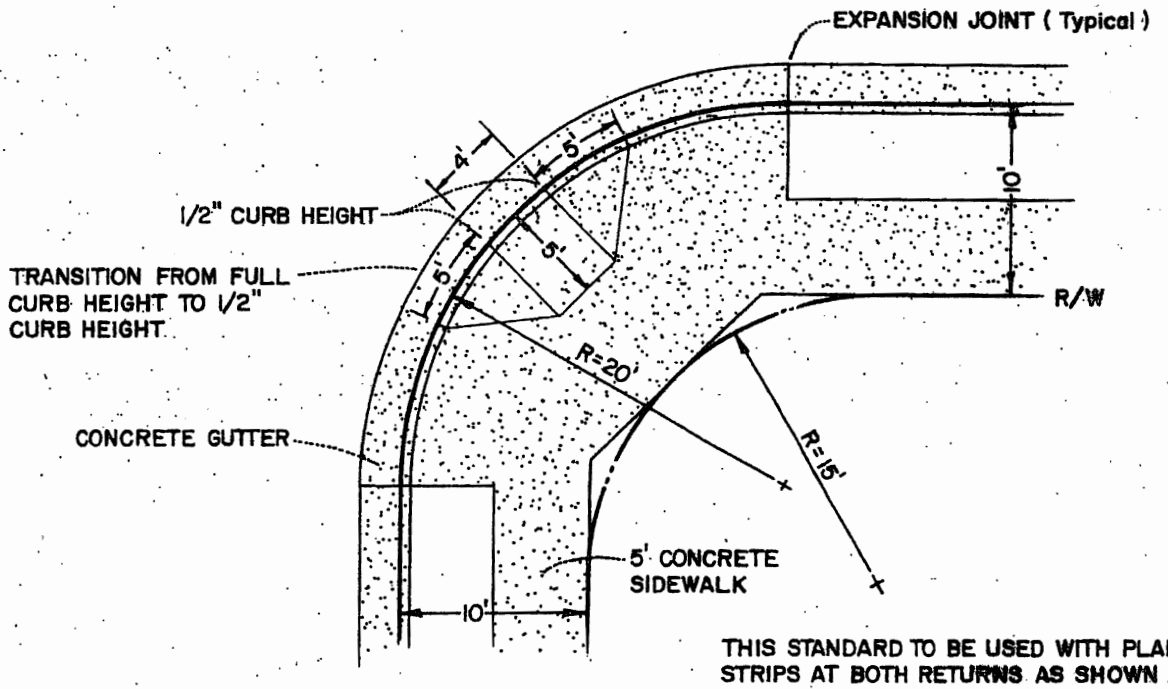

THIS STANDARD TO BE USED WITH PLANTER STRIPS AT BOTH RETURNS AS SHOWN AND WHEN SIDEWALK IS ADJACENT TO CURB AND GUTTER AT ONE RETURN ONLY.

CITY OF *Lindsay*
DEPARTMENT OF PUBLIC WORKS

CURB RETURN

MARK	DATE	REVISION

Engineering Standard
Approved [signature]
Date 9/13/79

ST-10

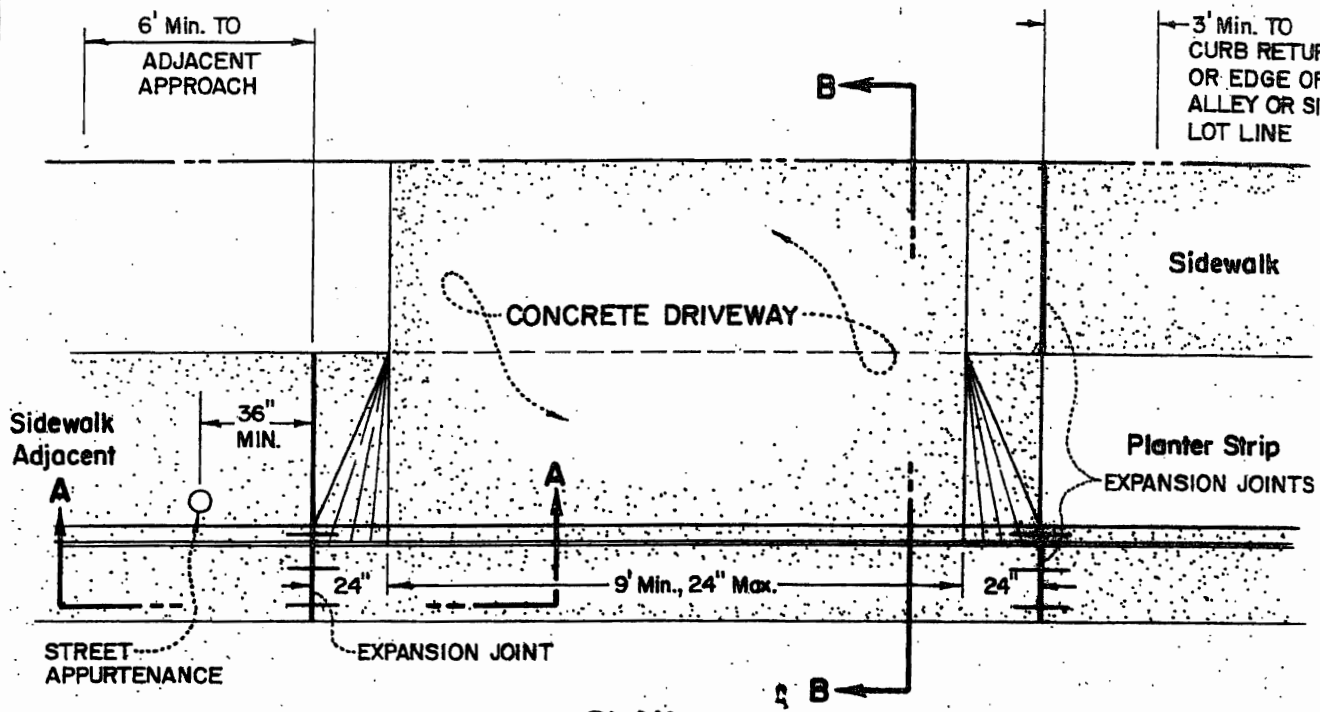

- PLAN -

NOTES:

1. CONCRETE SHALL BE 2500p.s.i. (5 SACK MIX)
2. APPROACH SHALL HAVE A HEAVY BROOM FINISH.
3. CURING COMPOUND SHALL BE APPLIED AS APPROVED BY THE CITY ENGINEER.

Note: Concrete: White color: curing compound as well as for the crossgutter.

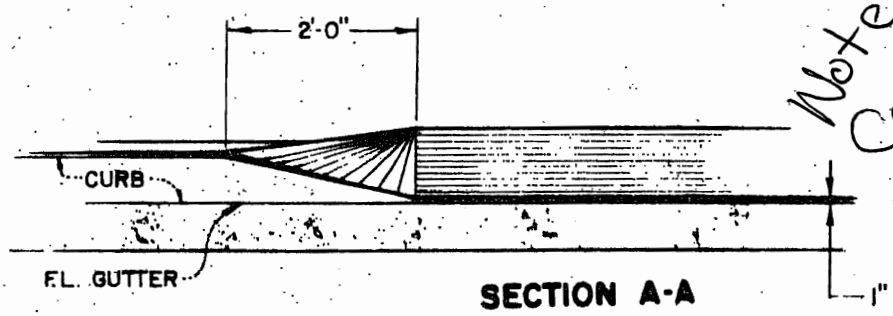

SECTION A-A

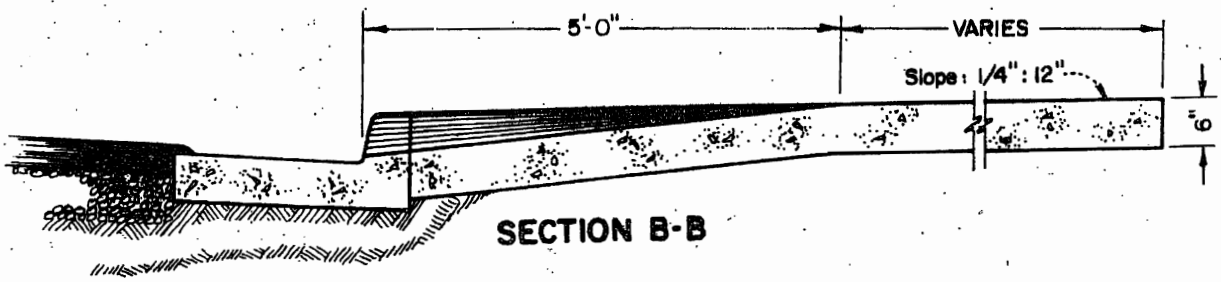

SECTION B-B

CITY OF Lindsay
DEPARTMENT OF PUBLIC WORKS

RESIDENTIAL DRIVE APPROACH

MARK	DATE	REVISION

Engineering Standard
Approved [signature]
Date 9/13/79

ST-11

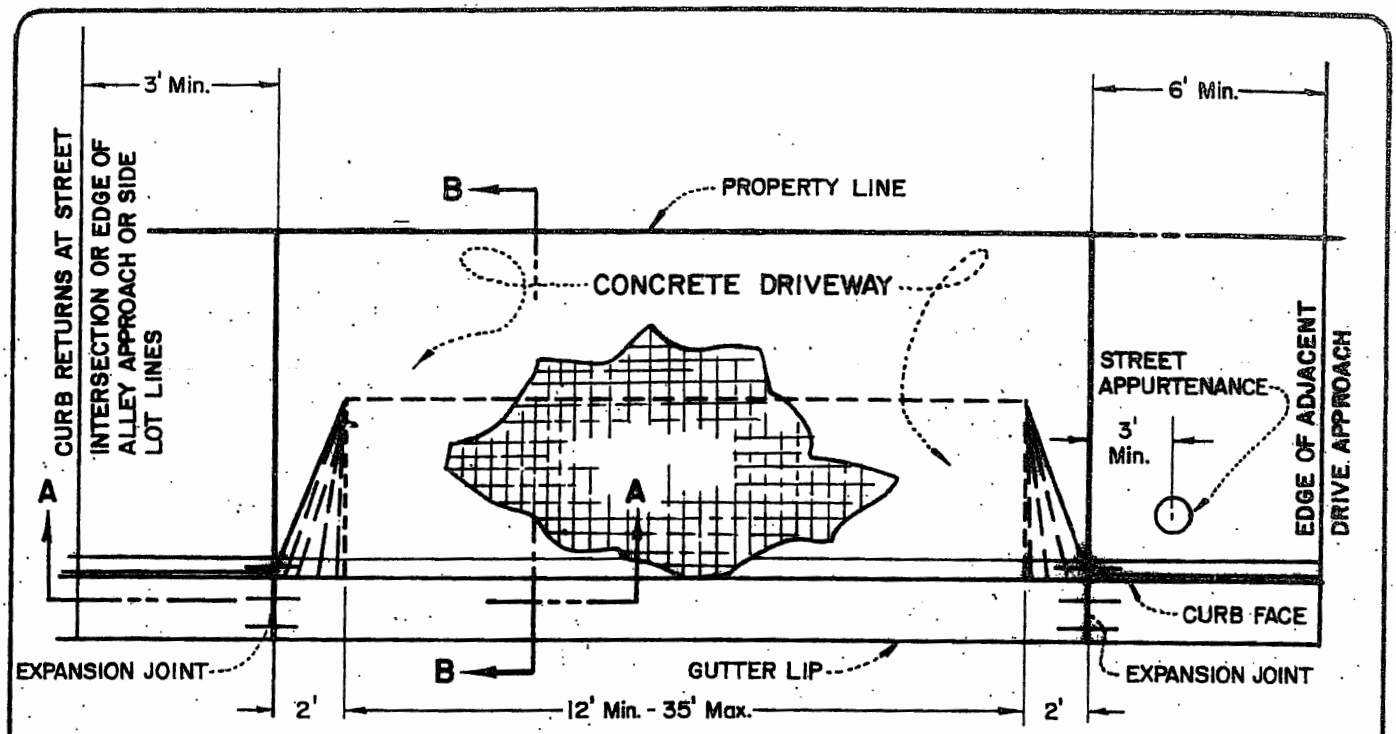

PLAN

NOTE:
NOT MORE THAN 60 % OF LOT FRONTAGE SHALL BE DRIVE APPROACH

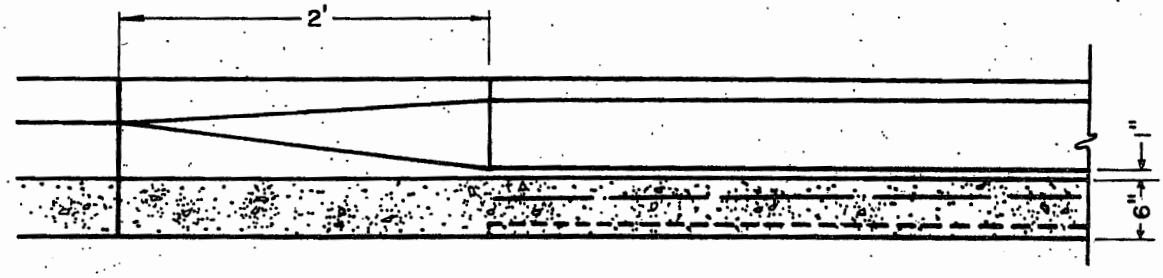

SECTION A-A

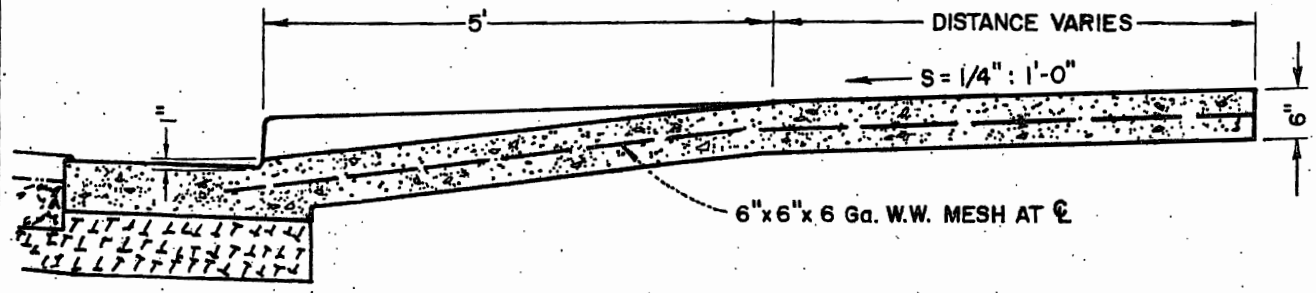

SECTION B-B

NOTES:

1. CONCRETE SHALL BE 2500psi. (5 SACK MIX)
2. DRIVE APPROACH SHALL HAVE A HEAVY BROOM FINISH
3. CURING COMPOUND SHALL BE APPLIED AS APPROVED BY THE CITY ENGINEER.

CITY OF *Lindsay*
DEPARTMENT OF PUBLIC WORKS

COMMERCIAL DRIVE APPROACH

MARK	DATE	REVISION

Engineering Standard
Approved
Date 9/13/79

ST-12

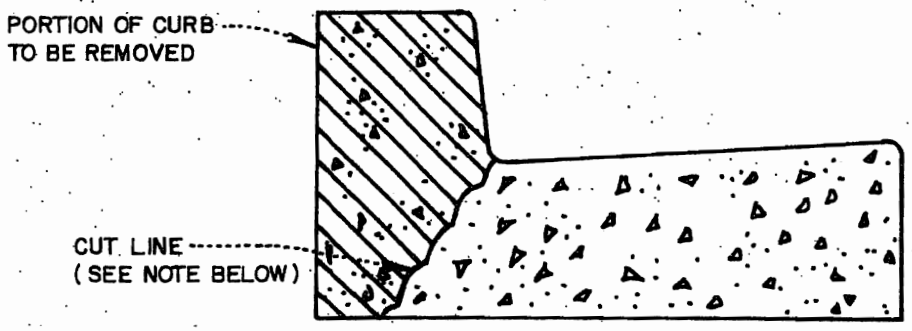

NOTE :

WHEN REMOVING CURB FOR NEW DRIVEWAY APPROACHES, CUT EXISTING CURB AS SHOWN ABOVE AT TOP OF APPROACH FOR NEW DRIVEWAY.

CITY OF Lindsay
DEPARTMENT OF PUBLIC WORKS

CURB REMOVAL AT NEW DRIVE APPROACH

MARK	DATE	REVISION		
			Engineering Standard	
			Approved	ST-13
			Date 9/13/79	

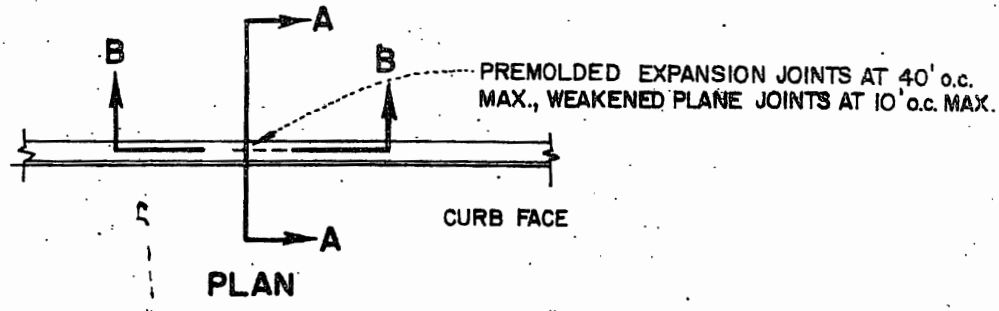

PLAN

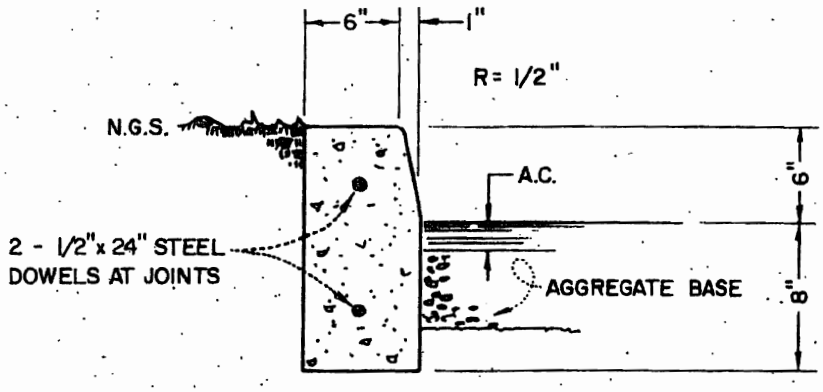

SECTION A-A

NOTES:

1. CONCRETE SHALL BE 2500psi. (5 Sack Mix)
2. CURB SHALL HAVE A LIGHT BRUSH FINISH
3. CURING COMPOUND SHALL BE APPLIED AS APPROVED BY THE CITY ENGINEER.

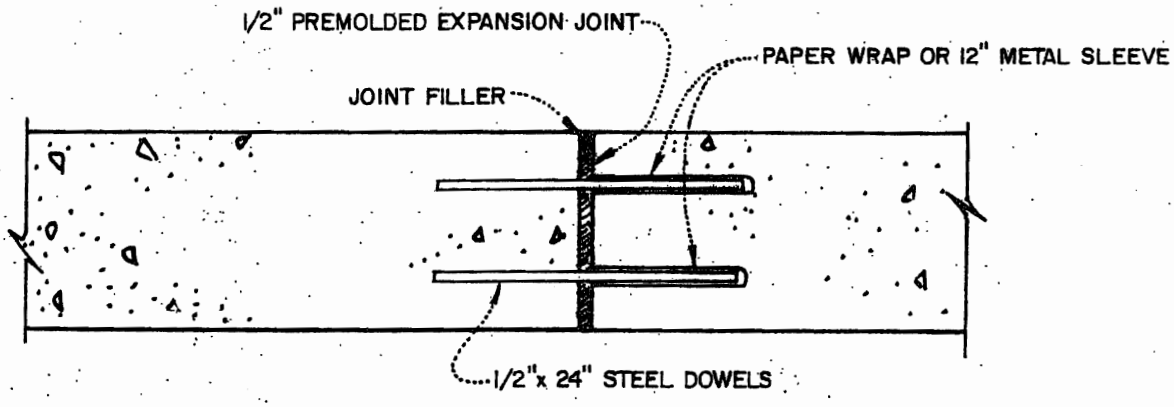

SECTION B-B

CITY OF Lindsay
DEPARTMENT OF PUBLIC WORKS

BARRIER TYPE CURB ONLY

MARK	DATE	REVISION

Engineering Standard
Approved [signature] ST-14
Date 9/13/79

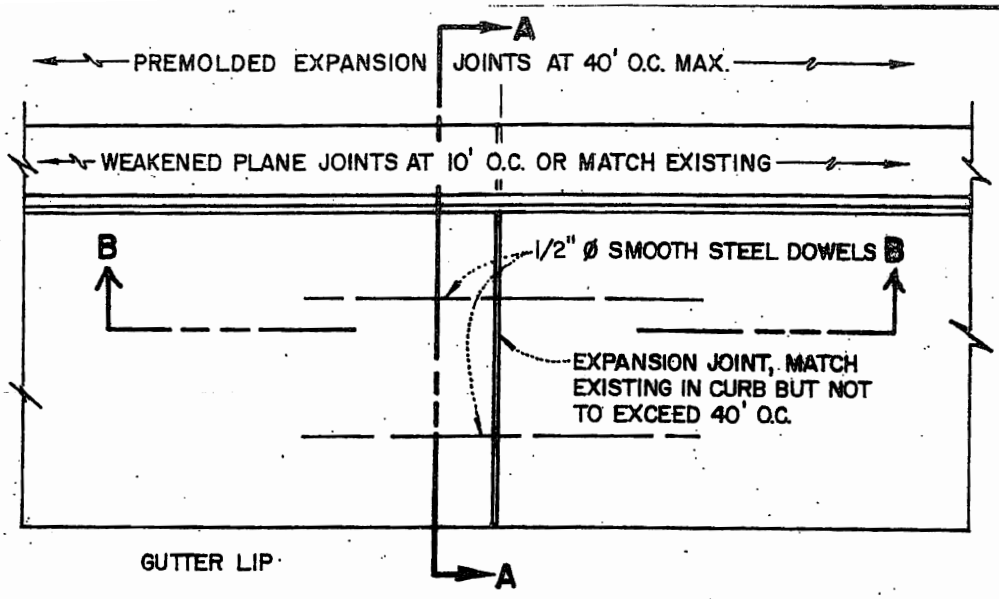

PLAN

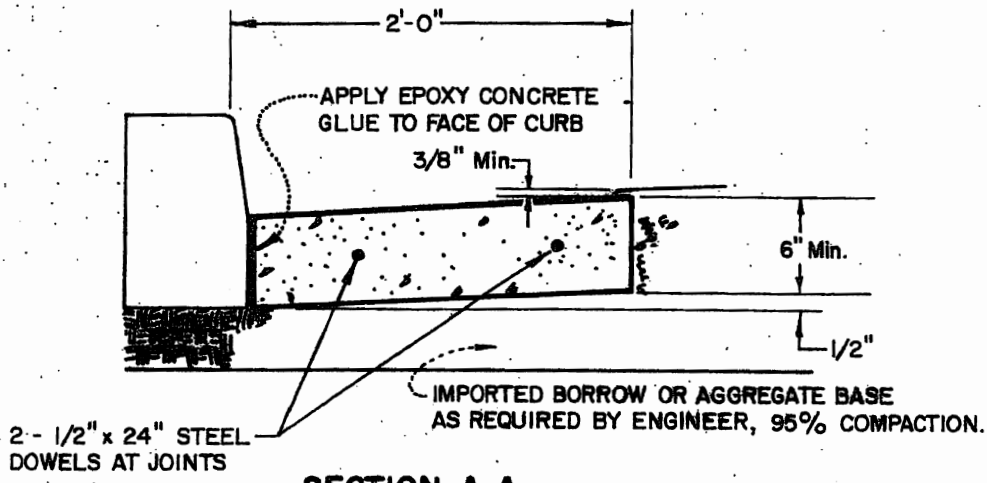

SECTION A-A

NOTES:

1. CONCRETE SHALL BE 2500p.s.i. (5 SACK MIX)
2. GUTTER FINISH SHALL BE LIGHT BROOM FINISH.
3. CURING COMPOUND SHALL BE APPLIED AS APPROVED BY THE CITY ENGINEER

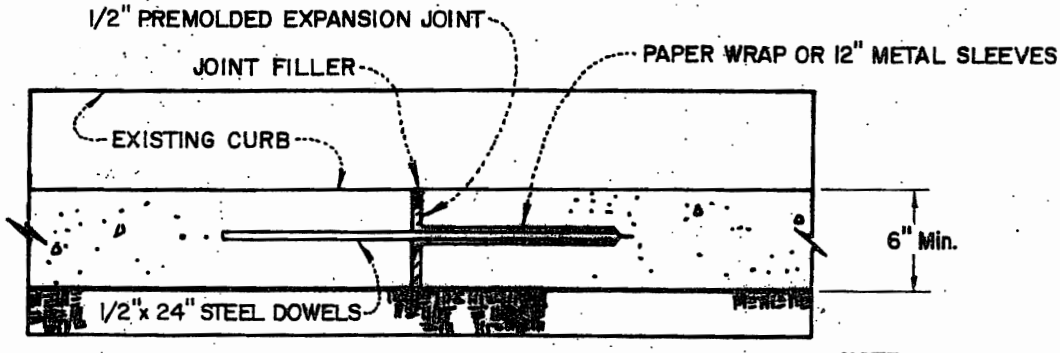

SECTION B-B

NOTE:
GUTTER SHALL HAVE A GRADIENT OF .20% Min.

CITY OF *Lindsay*
DEPARTMENT OF PUBLIC WORKS

CONCRETE GUTTER AT EXISTING CURB

MARK	DATE	REVISION

Engineering Standard
Approved [illegible]
Date 9/13/79

ST-15

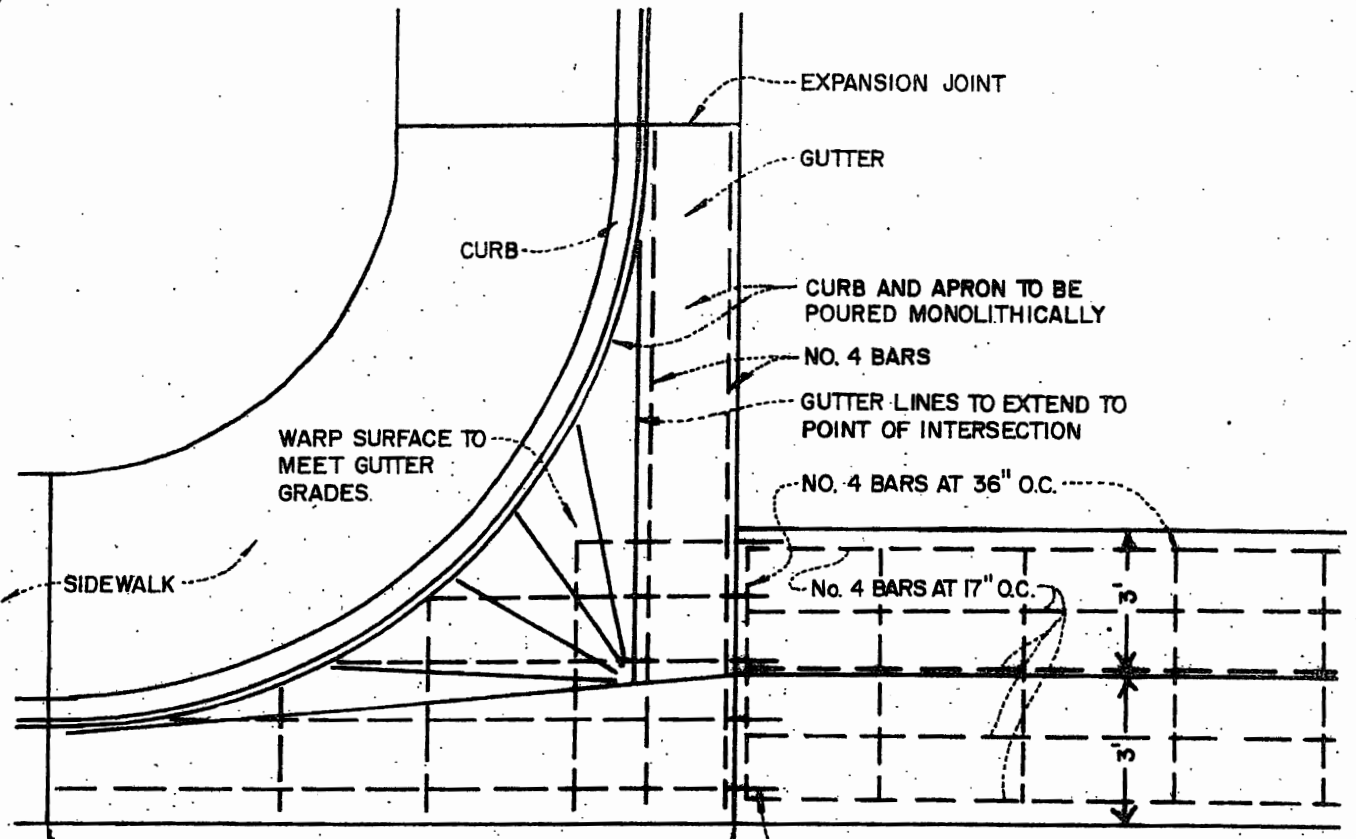

PLAN

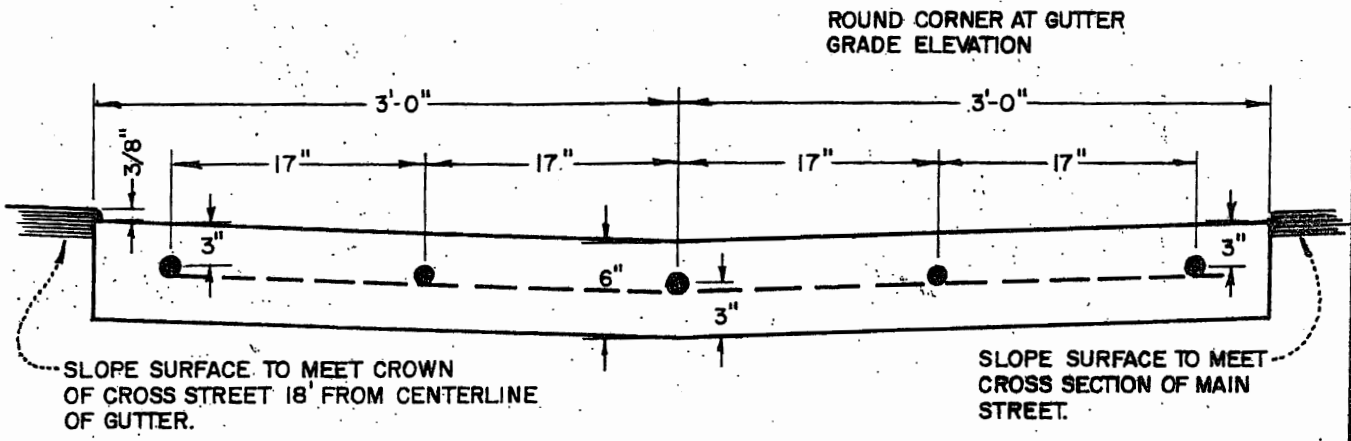

SECTION

CONCRETE SHALL BE 3000 p.s.i.
LIGHT BROOM FINISH
BEDDING REQUIREMENT PER CITY ENGINEER, CURING COMPOUND PER CITY ENGINEER.

CITY OF *Lindsay*
DEPARTMENT OF PUBLIC WORKS

CROSS GUTTER

MARK	DATE	REVISION

Engineering Standard
Approved [signature]
Date 9/14/79

ST-16

CITY OF *Lindsay*
DEPARTMENT OF PUBLIC WORKS

TYPE OF LUMBER
POSTS - REDWOOD (SHOP GRADE)
RAILING - DOUGLAS FIR (SHOP GRADE)

PAINT
TWO COATS OF WHITE PAINT SHALL BE APPLIED TO ALL WOOD SURFACES.

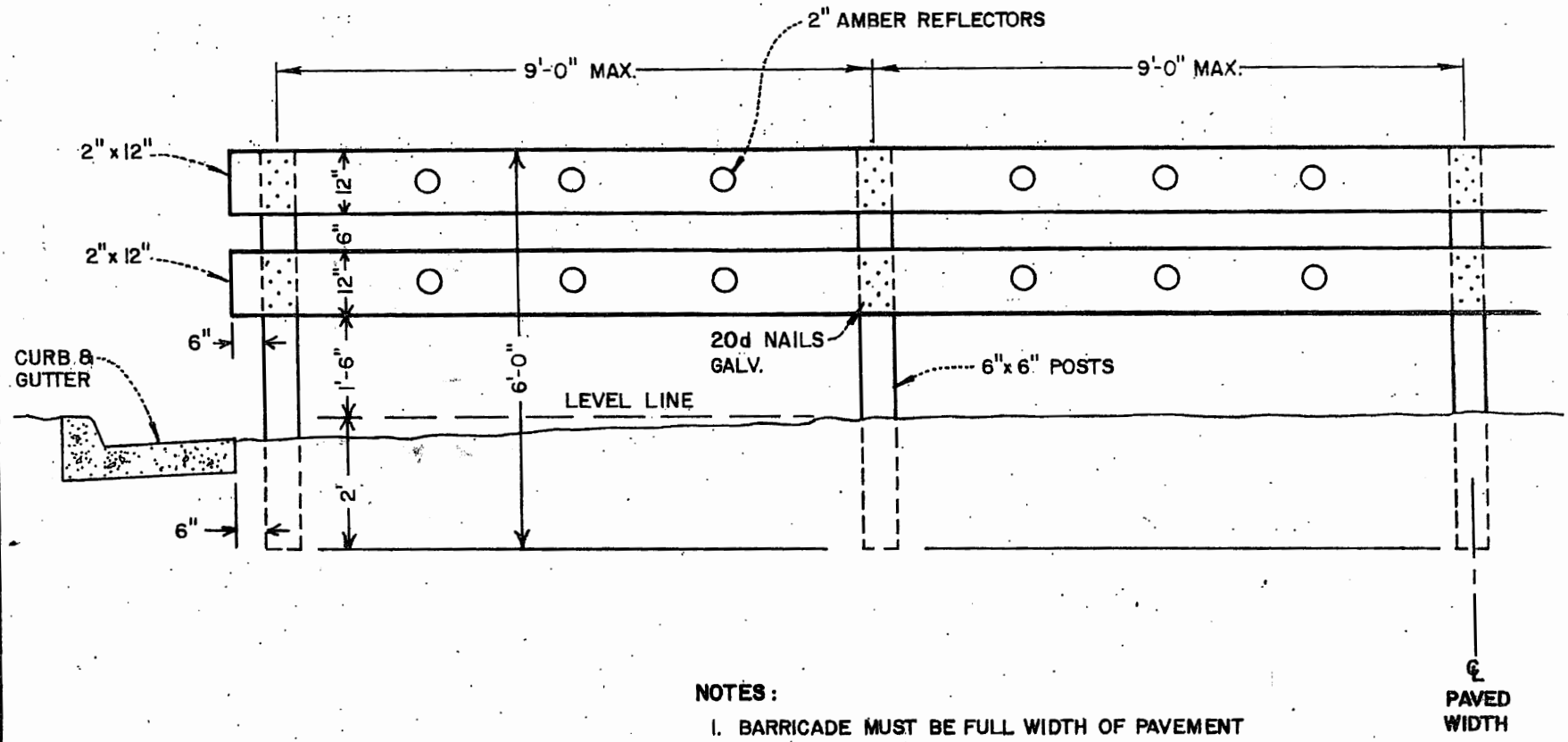

NOTES:

1. BARRICADE MUST BE FULL WIDTH OF PAVEMENT OR TRAVELED WAY.
2. APPROPRIATE SIGNS TO BE DESIGNATED BY THE DEPARTMENT OF PUBLIC WORKS.

MARK	DATE	REVISION

TIMBER BARRICADE

Engineering Standard

Approved: [illegible]

Date: 9/14/79

ST-17

LOCATION: ON RIGHT SIDE OF TRAFFIC ON MAJOR STREET, IN SIDEWALK 12" BEHIND CURB FACE, AT BEGINNING OF CURB RETURN OR AT A "T" INTERSECTION IN LINE WITH CURB OF OPPOSING STREET.

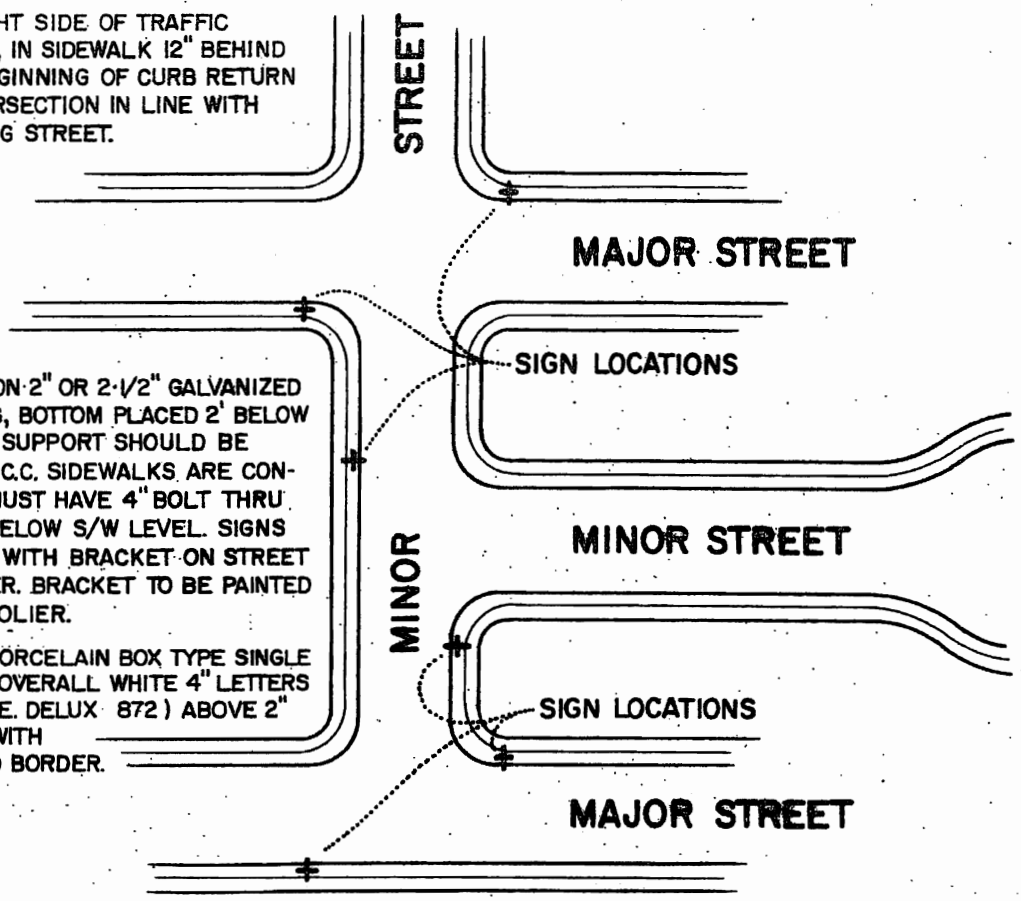

SUPPORT: MOUNT ON 2" OR 2-1/2" GALVANIZED IRON PIPE 10' LONG, BOTTOM PLACED 2' BELOW SIDEWALK GRADE. SUPPORT SHOULD BE PLACED AT TIME P.C.C. SIDEWALKS ARE CONSTRUCTED. PIPE MUST HAVE 4" BOLT THRU AT A POINT JUST BELOW S/W LEVEL. SIGNS MAY BE MOUNTED WITH BRACKET ON STREET LIGHT ELECTROLIER. BRACKET TO BE PAINTED COLOR OF ELECTROLIER.

SIGN MATERIAL: PORCELAIN BOX TYPE SINGLE PIECE, APP. 9"x30" OVERALL WHITE 4" LETTERS ON DARK GREEN (I.E. DELUX 872) ABOVE 2" BLOCK NUMBERS WITH ARROW. EMBOSSED BORDER.

ARRANGEMENT: SIGN FOR N-S TO BE PLACED ON TOP AND SIGN TO BE PARALLEL TO STREET WHICH IT NAMES.

PROCURING: CITY WILL ORDER STREET SIGNS ON RECEIPT OF DEPOSIT FROM SUBDIVIDER.

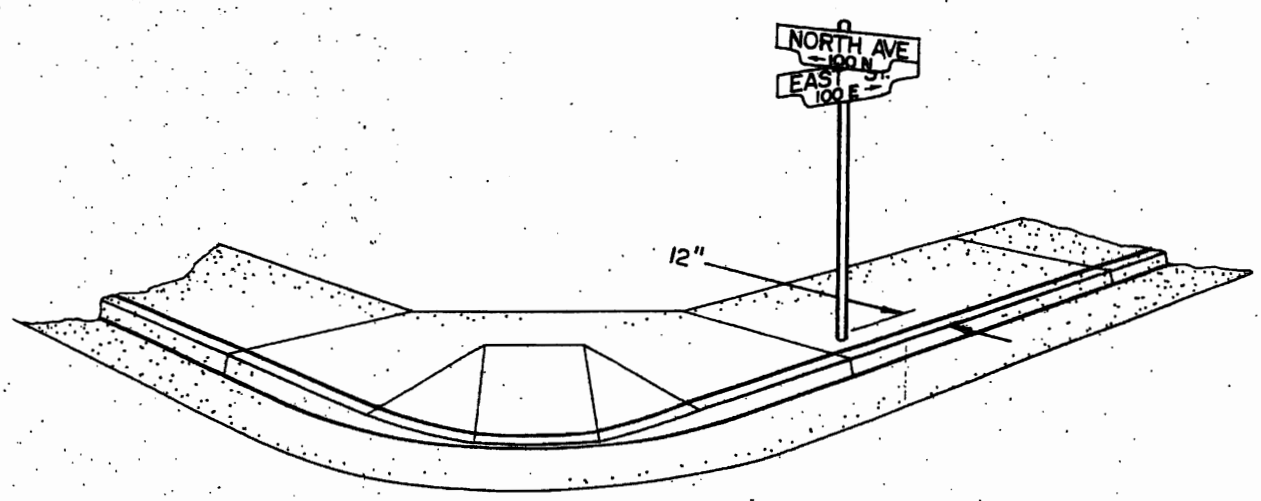

CITY OF *Lindsay*
DEPARTMENT OF PUBLIC WORKS

STREET SIGN LOCATION

MARK	DATE	REVISION

Engineering Standard
Approved [signature]
Date 9/13/79

ST-18

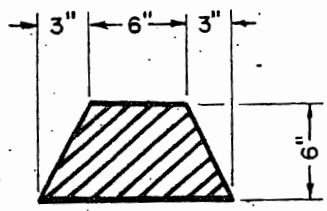

PLANT MIX ASPHALT CONCRETE

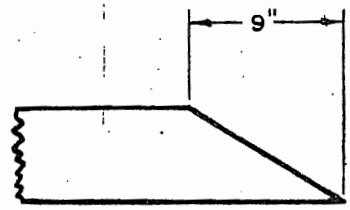

PAINTED WITH ASPHALTIC PAINT

6" DIKE

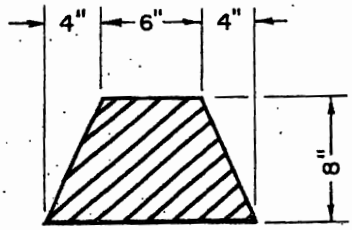

PLANT MIX ASPHALT CONCRETE

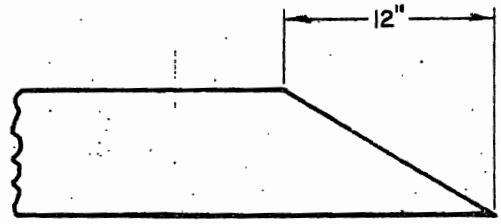

PAINTED WITH ASPHALTIC PAINT

8" DIKE

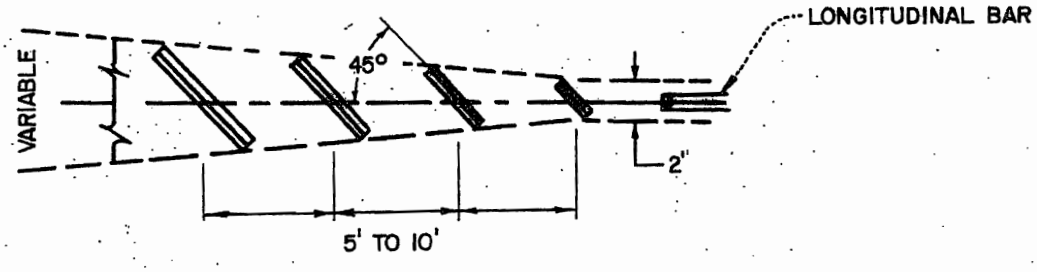

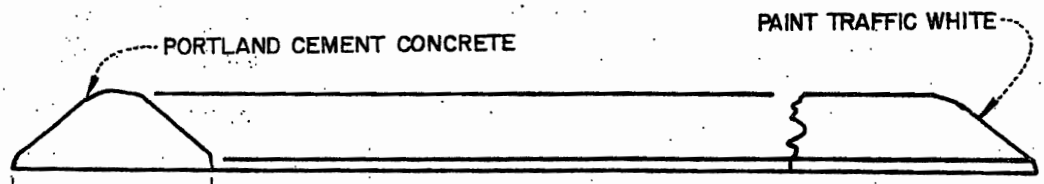

CROSS SECTION

SET ON PAVEMENT WITH APPROVED ADHESIVE

SIDE VIEW

RAISED TRAFFIC BARS

CITY OF Lindsay
DEPARTMENT OF PUBLIC WORKS

TRAFFIC BARS

MARK	DATE	REVISION

Engineering Standard
Approved [signature]
Date 7/18/79

ST-19

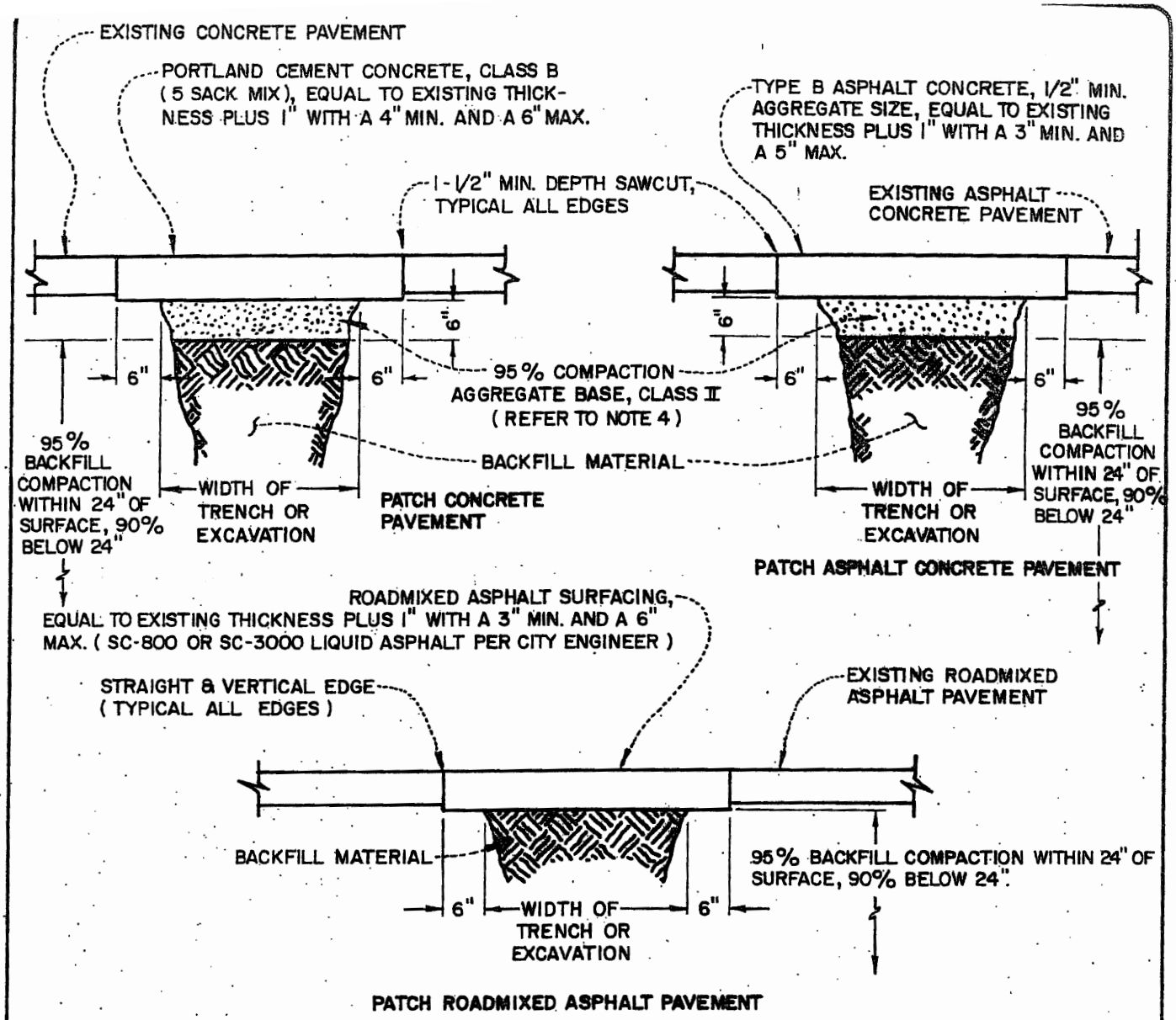

GENERAL NOTES:

1. ALL MATERIALS AND WORKMANSHIP SHALL CONFORM TO CITY STANDARD SPECIFICATIONS.
2. SUITABILITY OF BACKFILL MATERIAL SHALL BE AT THE DISCRETION OF THE CITY ENGINEER.
3. BACKFILL COMPACTION OUTSIDE OF ROADWAY OR ALLEYWAY STRUCTURAL SECTION SHALL BE 85%. (EXAMPLE: BEHIND BACK OF CURB OR WITHIN EASEMENTS.)
4. DECOMPOSED GRANITE FROM SOURCE APPROVED BY CITY ENGINEER MAY BE SUBSTITUTED FOR CLASS II BASE WITH A 10% INCREASE IN THE REQUIRED BASE THICKNESS AND 95% COMPACTION IN THE BASE. THIS SUBSTITUTION WILL ONLY BE ALLOWED IN MINOR COLLECTOR, LOCAL OR CUL-DE-SAC ROADWAYS AND IN ALLEYWAYS AND WOULD REQUIRE A 10% INCREASE IN THE THICKNESS INDICATED. THIS SUBSTITUTION WILL NOT BE ALLOWED WITH MAJOR COLLECTOR OR ARTERIAL ROADWAYS.
5. SAWCUTS OR VERTICAL EDGES SHALL BE MADE PARALLEL TO, OR AT RIGHT ANGLES TO, THE CENTERLINE OF THE ROADWAY OR ALLEYWAY.
6. PATCHES LESS THAN TWO FEET FROM EXISTING PATCHES, EDGES OF PAVEMENT OR GUTTERS SHALL BE EXTENDED TO INCLUDE THE INTERMEDIATE ISOLATING STRIP OF EXISTING PAVEMENT.

CITY OF Lindsay
DEPARTMENT OF PUBLIC WORKS

PAVEMENT PATCHES

MARK	DATE	REVISION

Engineering Standard
Approved
Date 9/14/79

ST-20

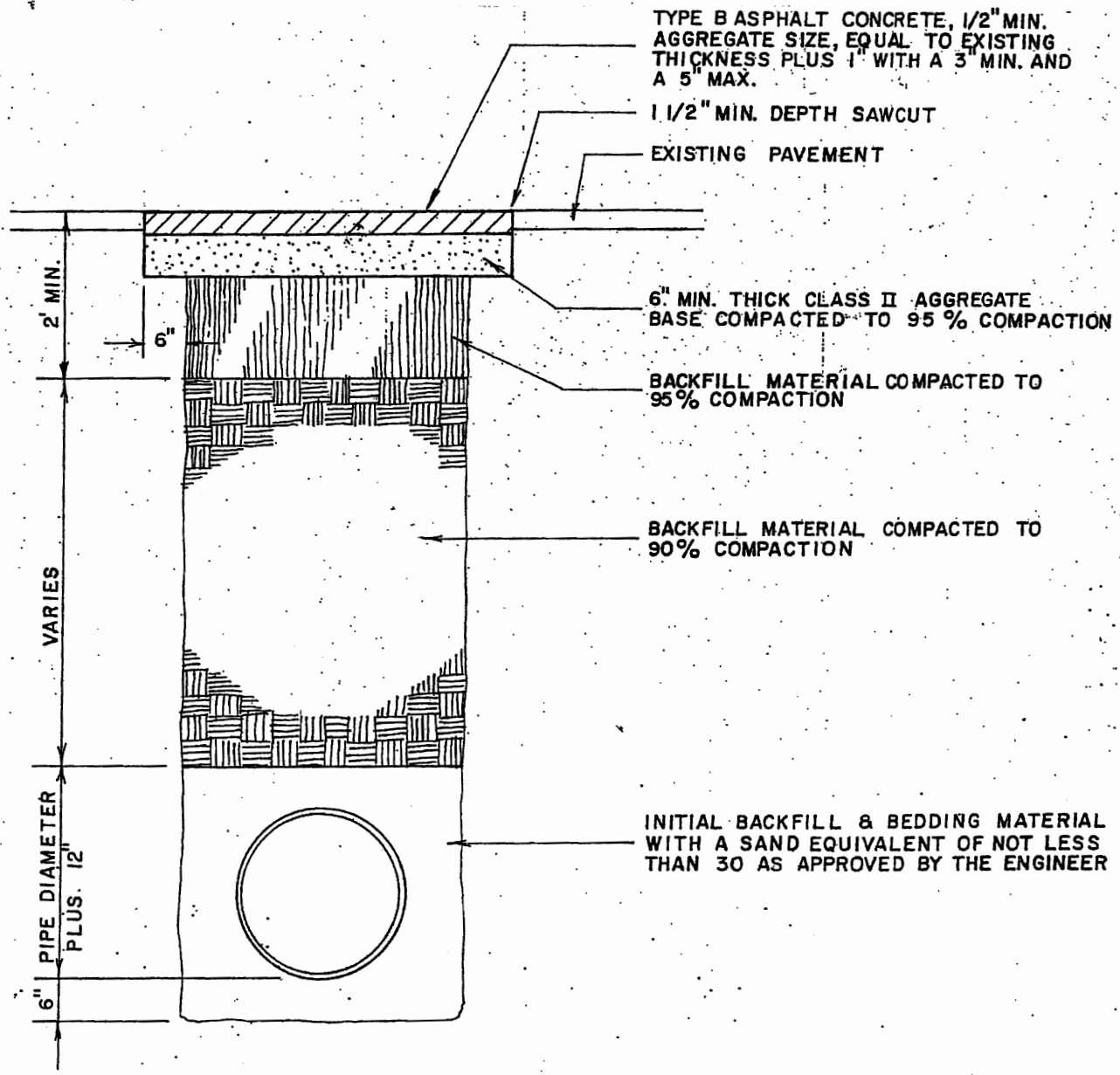

CITY OF Lindsay
DEPARTMENT OF PUBLIC WORKS

TYPICAL TRENCH SECTION AT PAVED AREAS

MARK	DATE	REVISION	Engineering Standard	ST-20A
			Approved	
			Date	

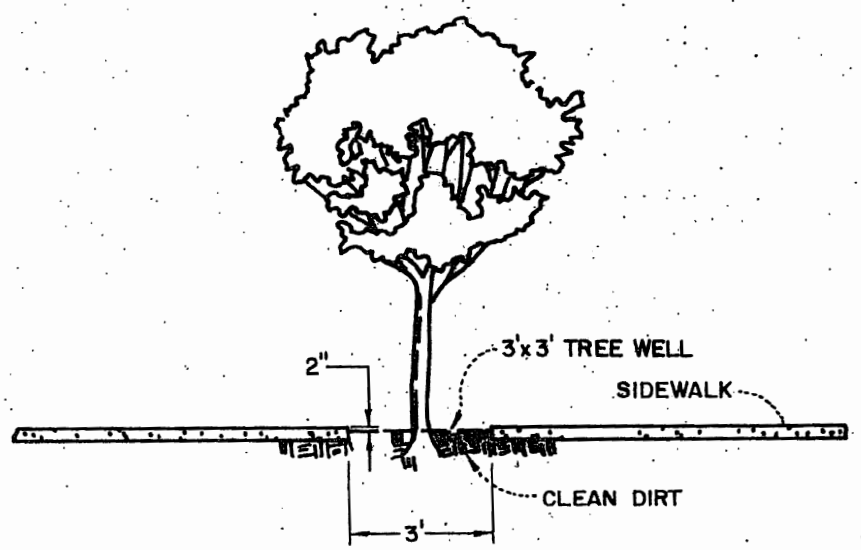

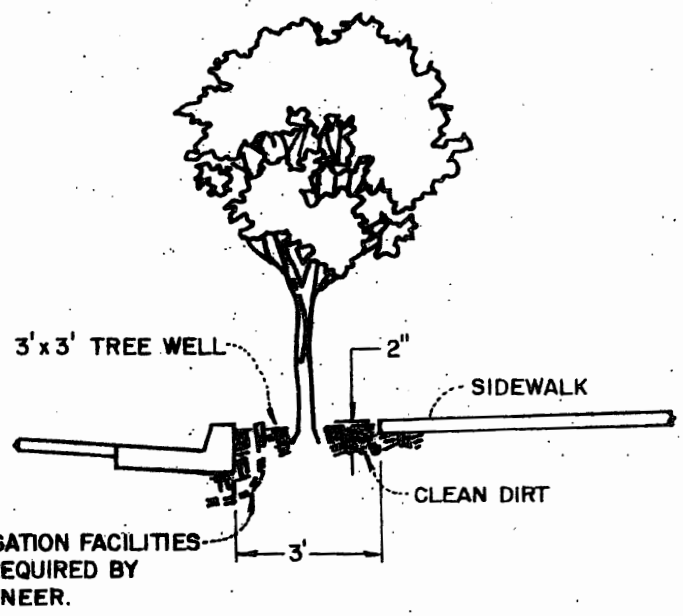

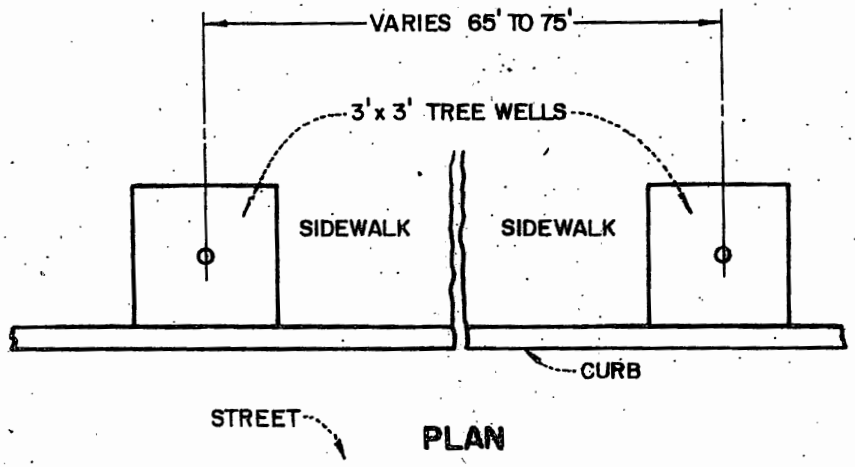

PLAN

NOTES:

1. PAVE SURFACE WITH BRICKS OR FLOWERS
2. FORM LUMBER FOR TREE WELL SHALL BE 2"x4".
3. ONE INCH CONCRETE CAPPING MAY BE REQUIRED.
4. IRRIGATION FACILITIES SHALL BE REQUIRED BY THE ENGINEER.

CITY OF Lindsay
DEPARTMENT OF PUBLIC WORKS

MARK	DATE	REVISION

COMMERCIAL SIDEWALK PATTERN ONLY

TREE WELL

Engineering Standard

Approved [illegible]

Date 9/13/79

ST-21

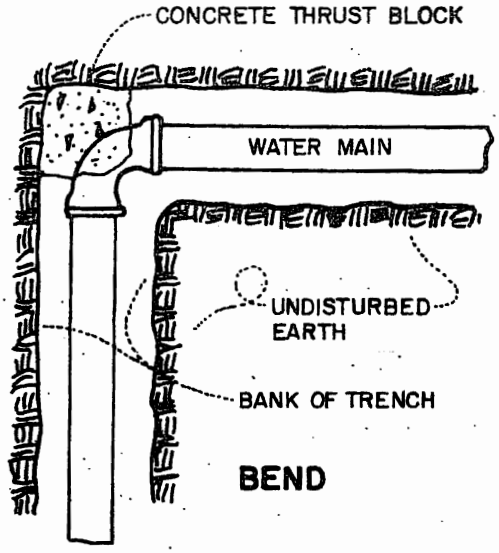

BEND

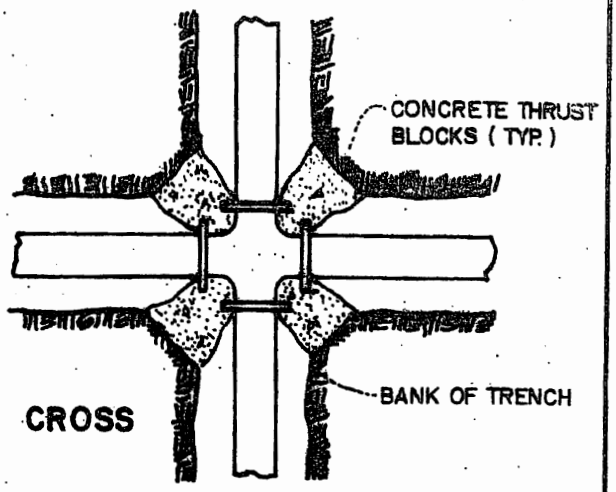

CROSS

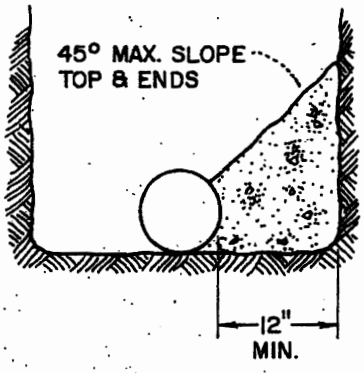

Note:

CONCRETE SHALL BE 2500 p.s.i. (5 SACK).

ALL SITUATIONS NOT COVERED HERE SHALL BE INDIVIDUALLY DESIGNED BY THE CITY ENGINEER.

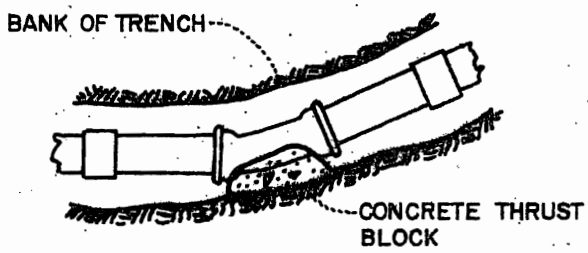

ANGLE BEND

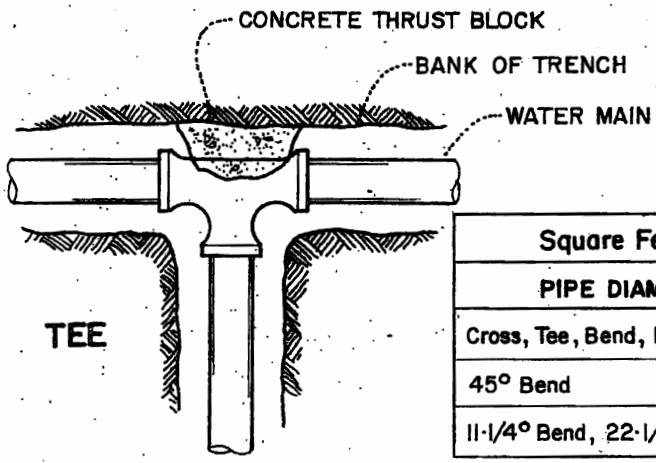

TEE

Square Feet of Bearing Areas Required				
PIPE DIAMETER	6"	8"	10"	12"
Cross, Tee, Bend, Plug & Fire Hydrant	3	5	8	11
45° Bend	2	3	5	6
11-1/4° Bend, 22-1/2° Bend	1	2	3	3

CITY OF Lindsay
DEPARTMENT OF PUBLIC WORKS

CONCRETE THRUST BLOCK DETAIL

MARK	DATE	REVISION

Engineering Standard
Approved [signature]
Date 9/14/79

WA-1

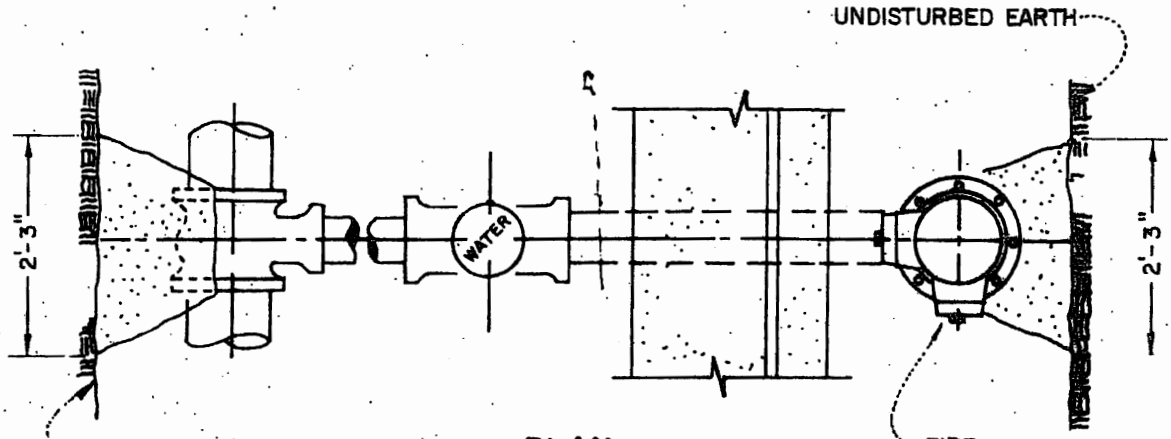

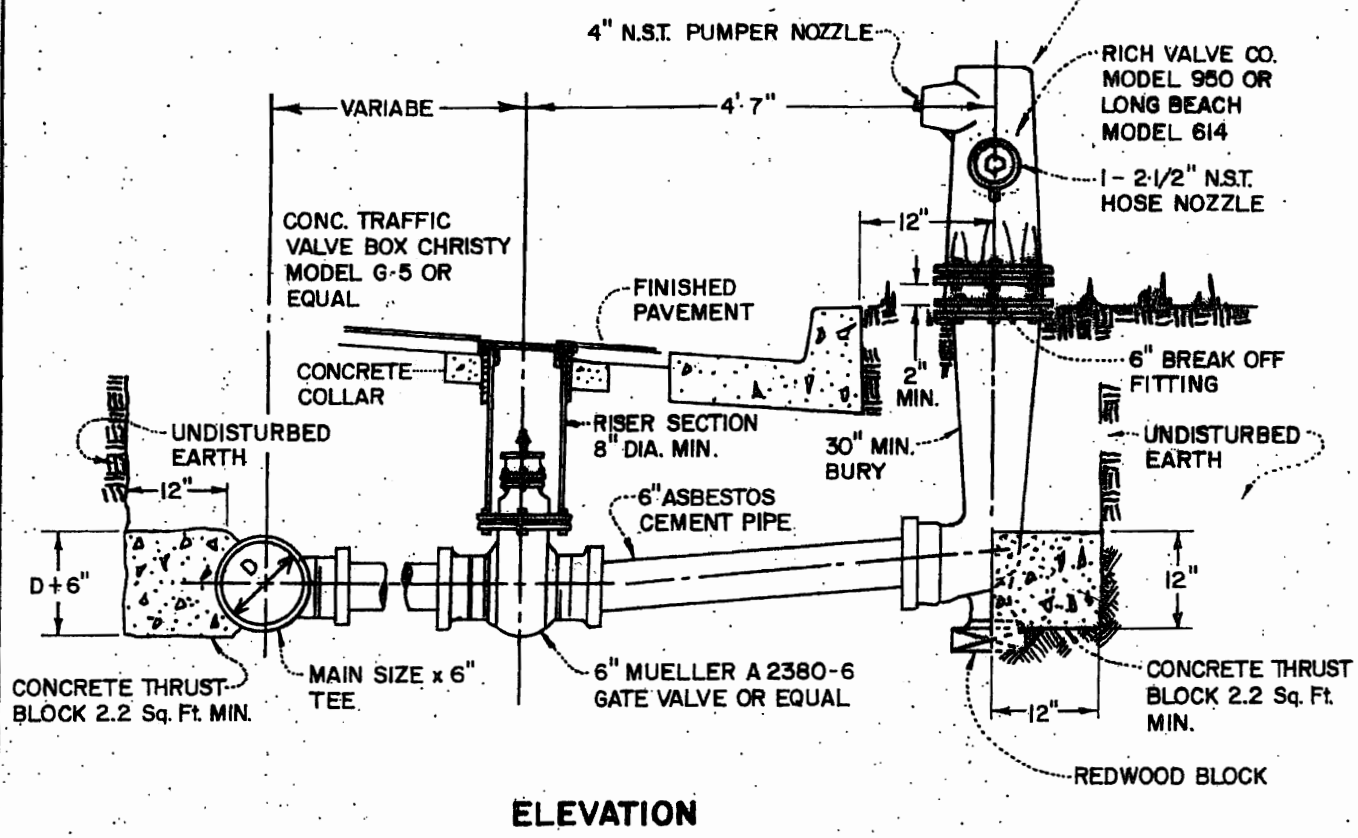

CITY OF *Lindsay*
DEPARTMENT OF PUBLIC WORKS

FIRE HYDRANT ASSEMBLY

MARK	DATE	REVISION

Engineering Standard
Approved [signature]
Date 9/13/79

WA-2

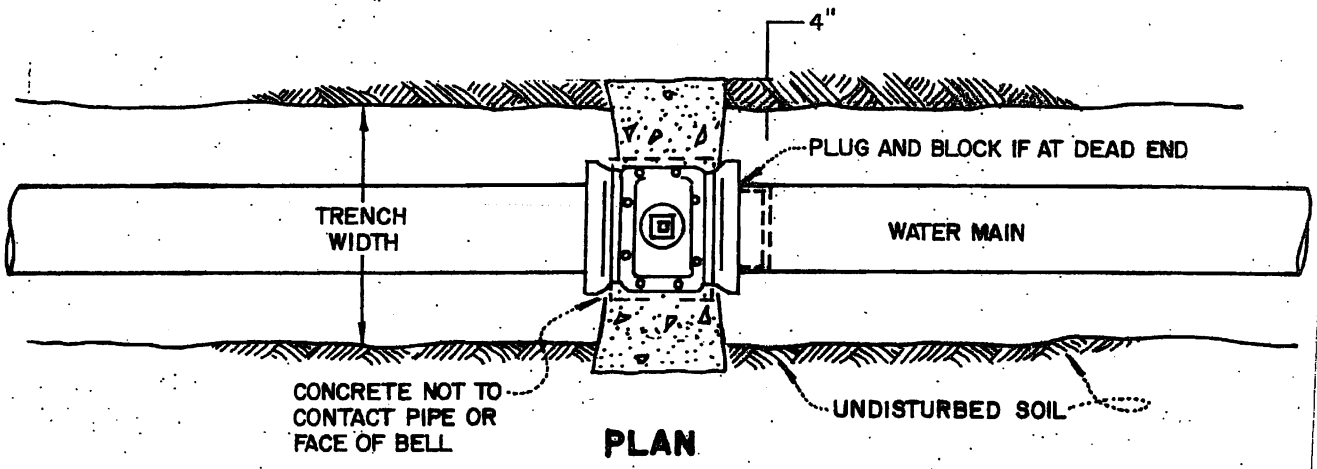

PLAN

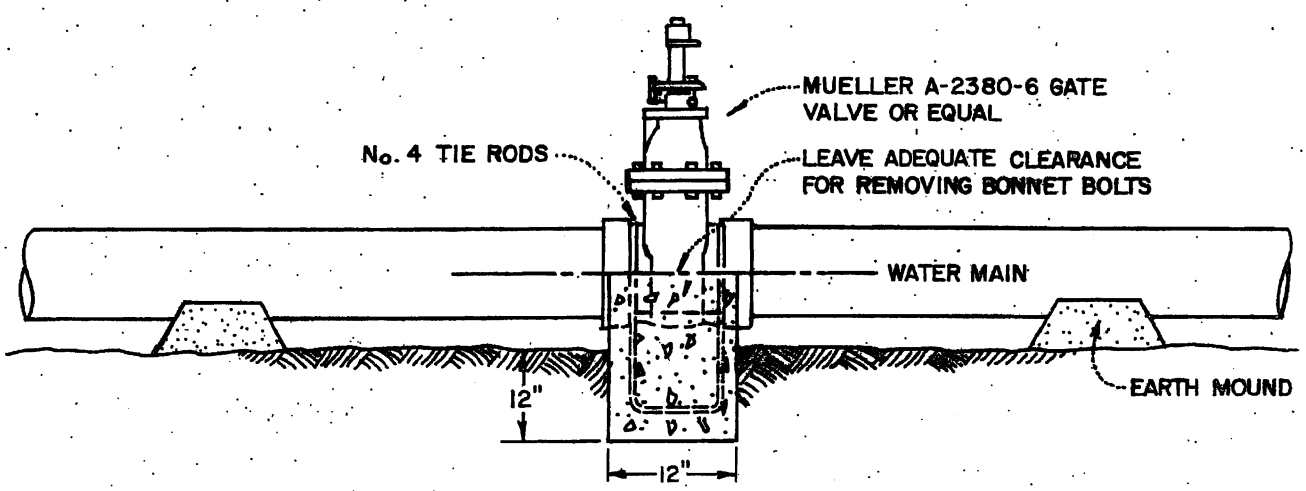

ELEVATION

NOTES:

1. ALL GATE VALVE THRUST BLOCKS TO BE SIZED FOR DIFFERENTIAL PRESSURE OF 150 p.s.i.
2. VALVES ON TEMPORARY DEAD ENDS TO BE BLOCKED FOR FUTURE EXTENSION WITH DIFFERENTIAL PRESSURE ON VALVE.
3. TIE RODS (COATED WITH MORTAR OR BITUMASTIC MATERIAL) REQUIRED ON ALL VALVES OVER 12" AND ALL VALVES AT DEAD ENDS.

CITY OF *Lindsay*
DEPARTMENT OF PUBLIC WORKS

GATE VALVE

MARK	DATE	REVISION

Engineering Standard
Approved [signature]
Date 9/14/79

WA-3

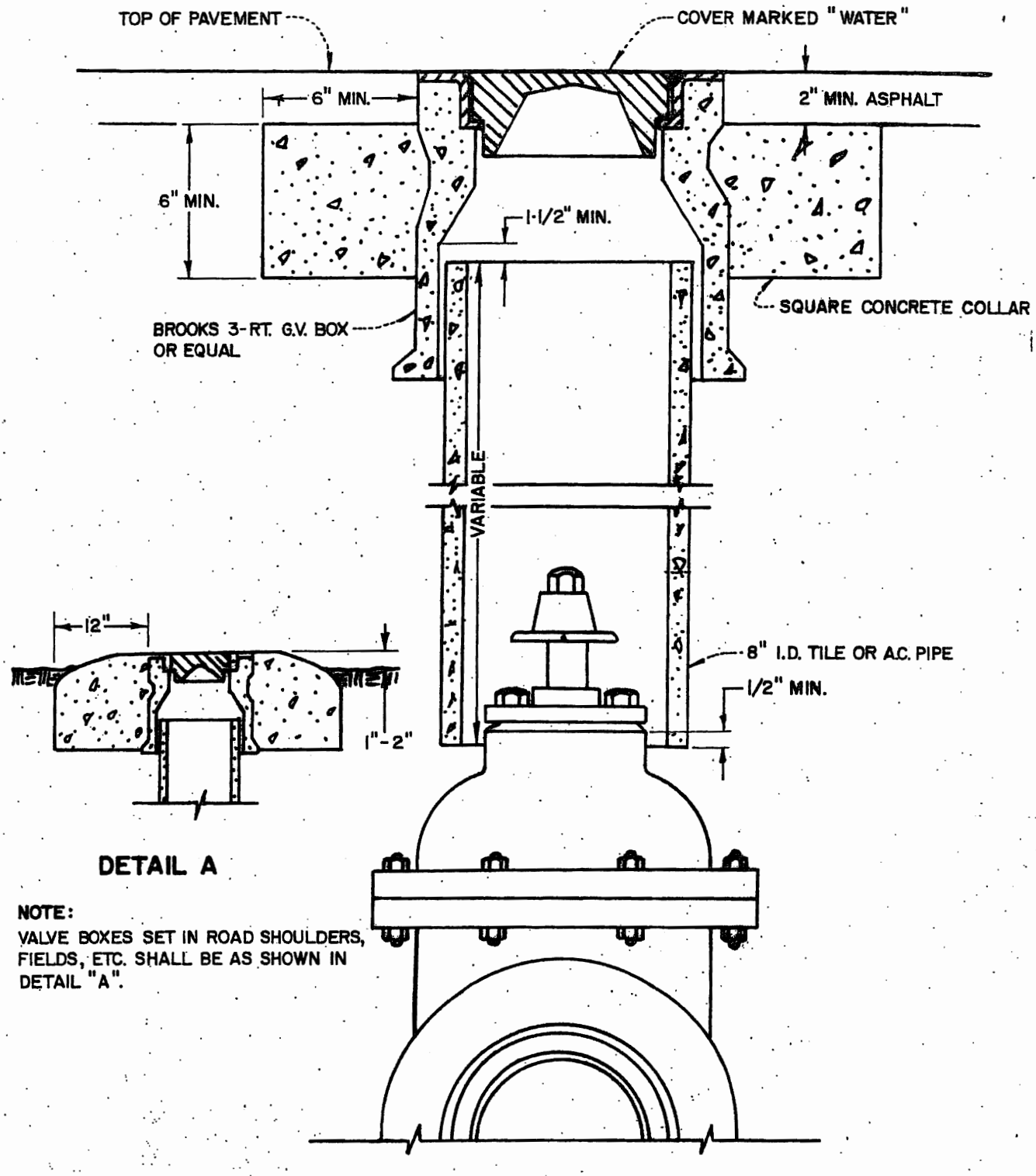

DETAIL A

NOTE:
VALVE BOXES SET IN ROAD SHOULDERS, FIELDS, ETC. SHALL BE AS SHOWN IN DETAIL "A".

PARTIAL VERTICAL SECTION

CITY OF Lindsay
DEPARTMENT OF PUBLIC WORKS

VALVE ACCESS BOX

MARK	DATE	REVISION

Engineering Standard
Approved [signature]
Date July 9, 1979

WA-4

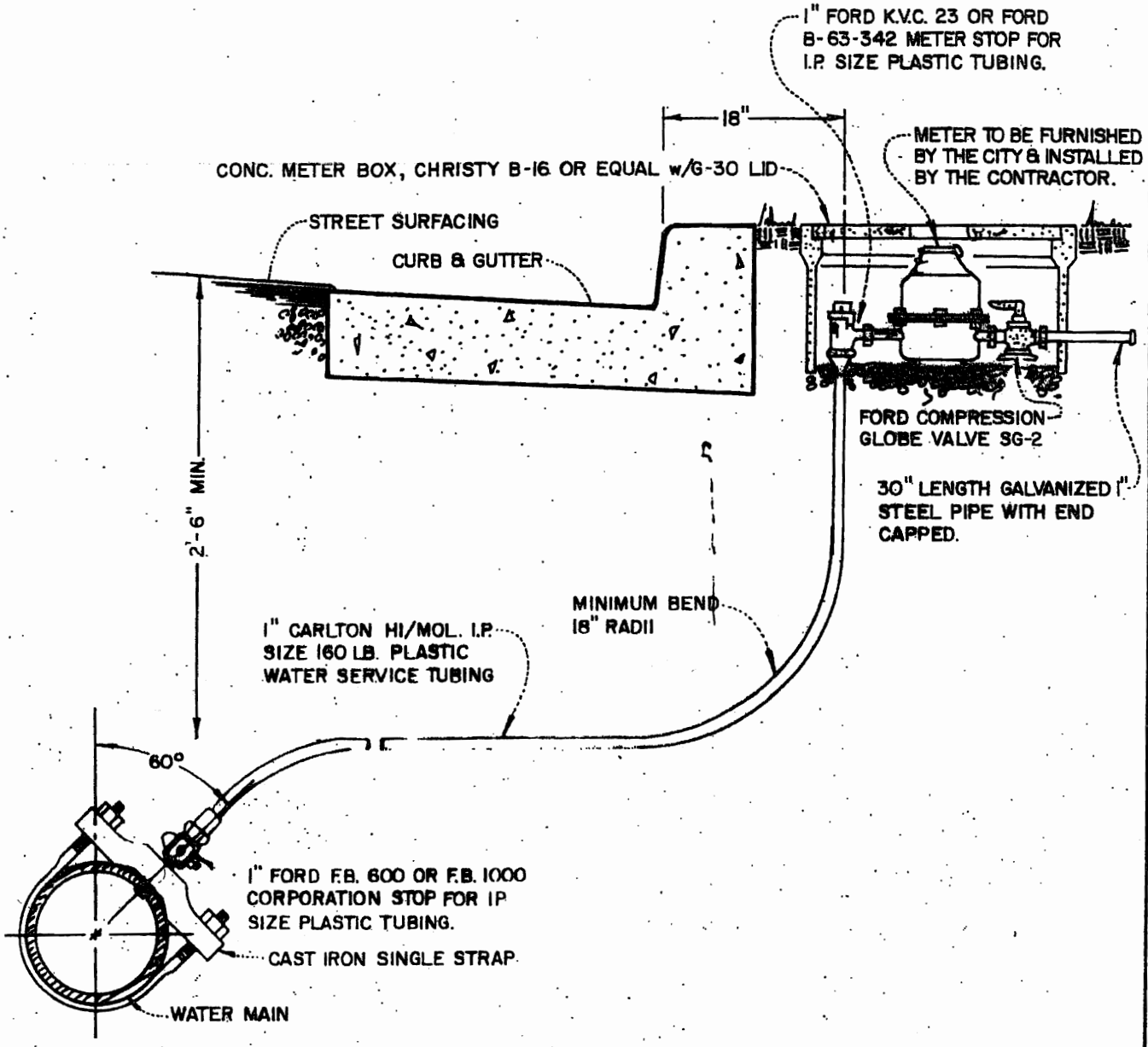

INSTALLATION DETAILS OF LARGER SERVICES TO BE DETERMINED BY ENGINEER.

CITY OF *Lindsay*
DEPARTMENT OF PUBLIC WORKS

1" WATER SERVICE

MARK	DATE	REVISION

Engineering Standard
Approved [signature]
Date 9/14/79

WA-5

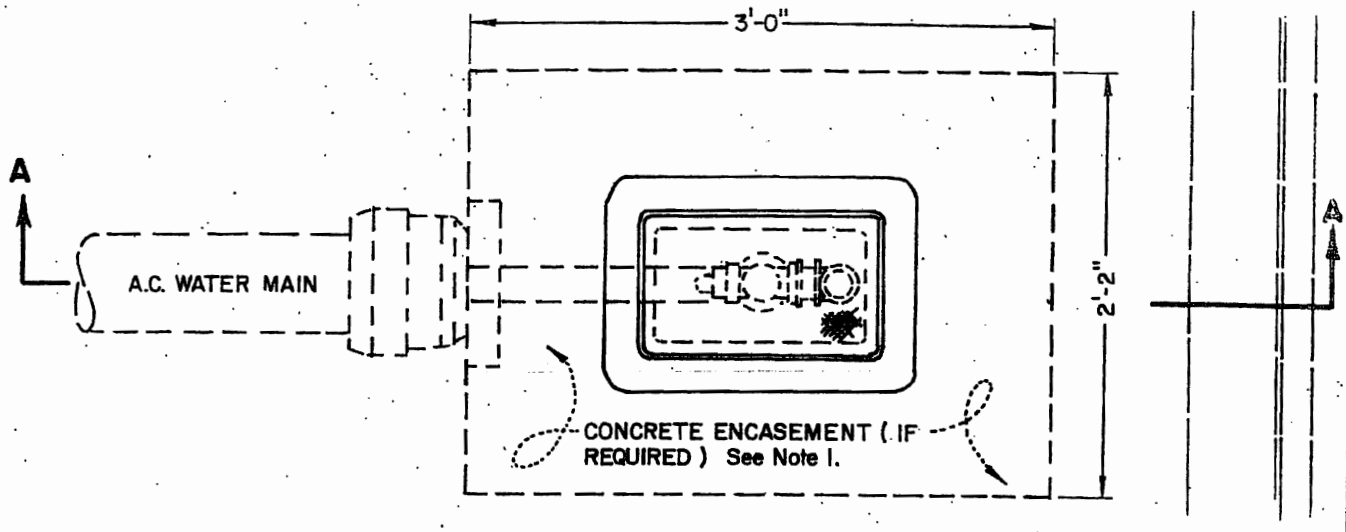

PLAN

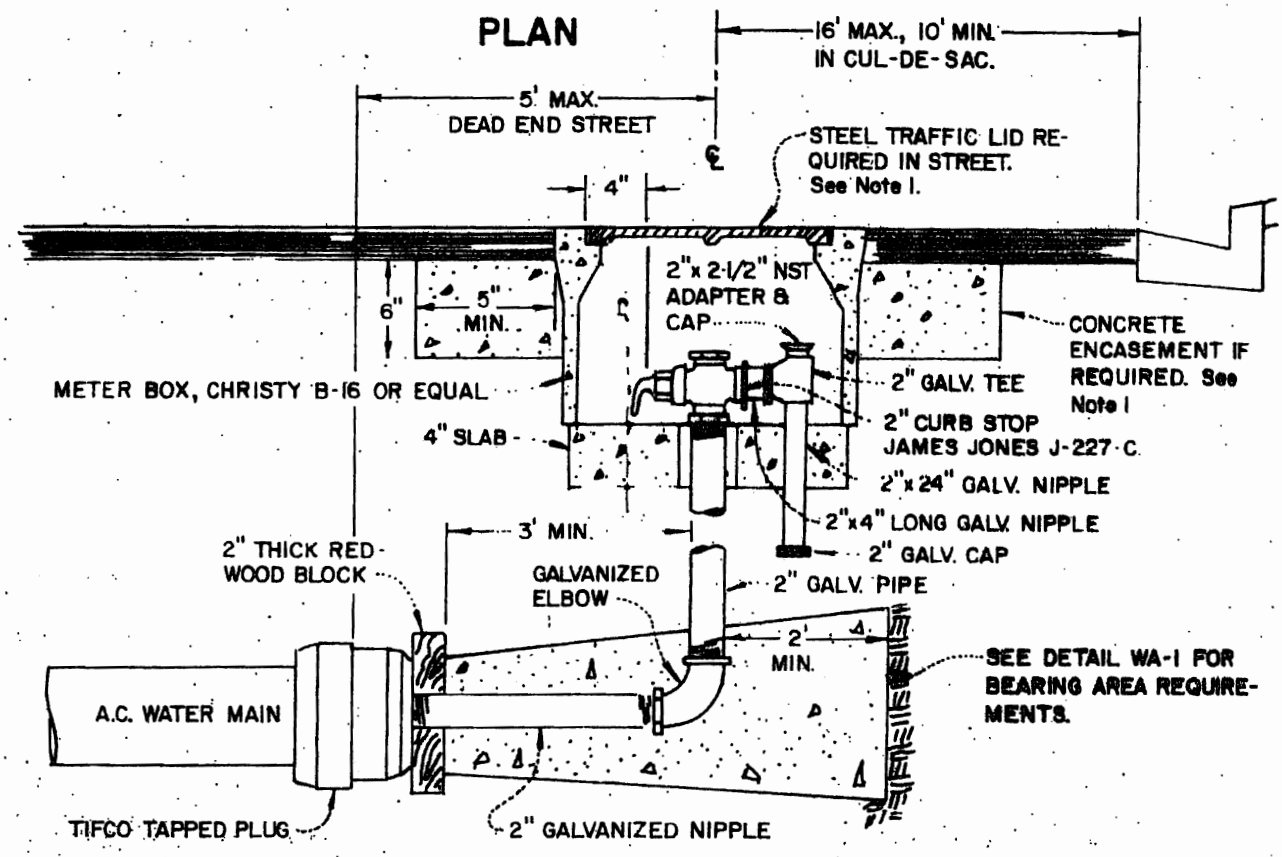

SECTION A-A

NOTES:

1. CONCRETE ENCASEMENT AND STEEL TRAFFIC LIDS REQUIRED FOR ALL PERMANENT INSTALLATIONS SUBJECT TO TRAFFIC.
2. CURB STOP KEY SHALL BE ALIGNED TO SIDE AS SHOWN.
3. ALL PIPE ENCASED IN CONCRETE TO BE PAINTED WITH RUST RESISTANT PAINT AND WRAPPED WITH PLASTIC TAPE.

CITY OF *Lindsay*
DEPARTMENT OF PUBLIC WORKS

BLOW OFF

MARK	DATE	REVISION

Engineering Standard
Approved
Date 9/14/79

WA-6

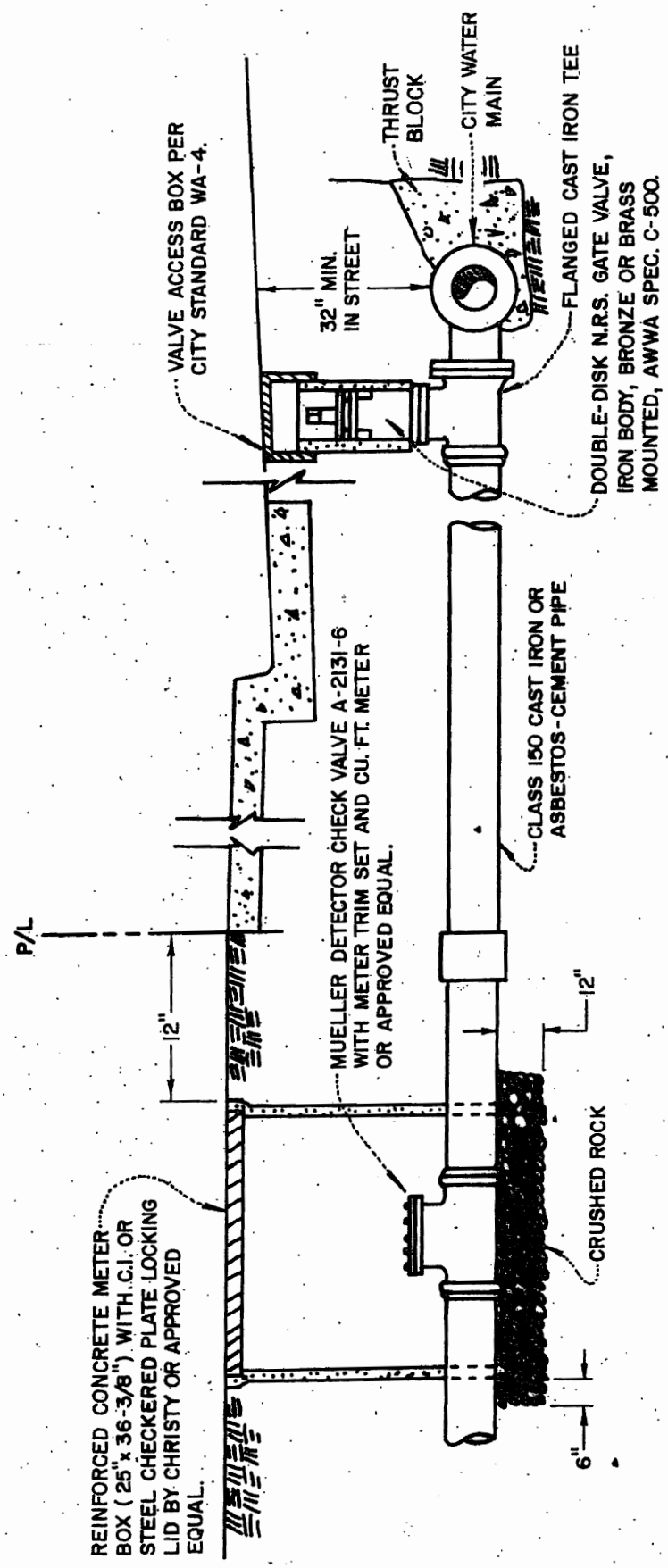

CITY OF *Lindsay*
DEPARTMENT OF PUBLIC WORKS

FIRE SERVICE

MARK	DATE	REVISION

Engineering Standard
Approved [signature]
Date 9/14/79

WA-7

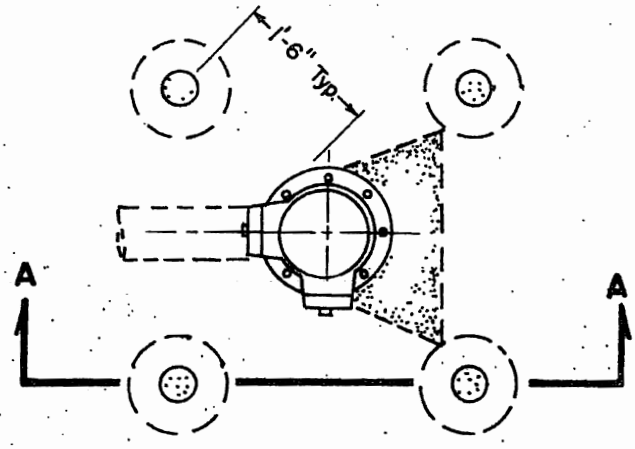

PLAN

NOTE:

THE INSTALLATION OF TWO TRAFFIC SIDE POSTS AT A FIRE HYDRANT SHALL CONSTITUTE ONE FIRE HYDRANT ASSEMBLY. ADDITIONAL POSTS MAY BE REQUIRED AT THE DIRECTION OF THE ENGINEER AND WOULD BE PLACED AS SHOWN

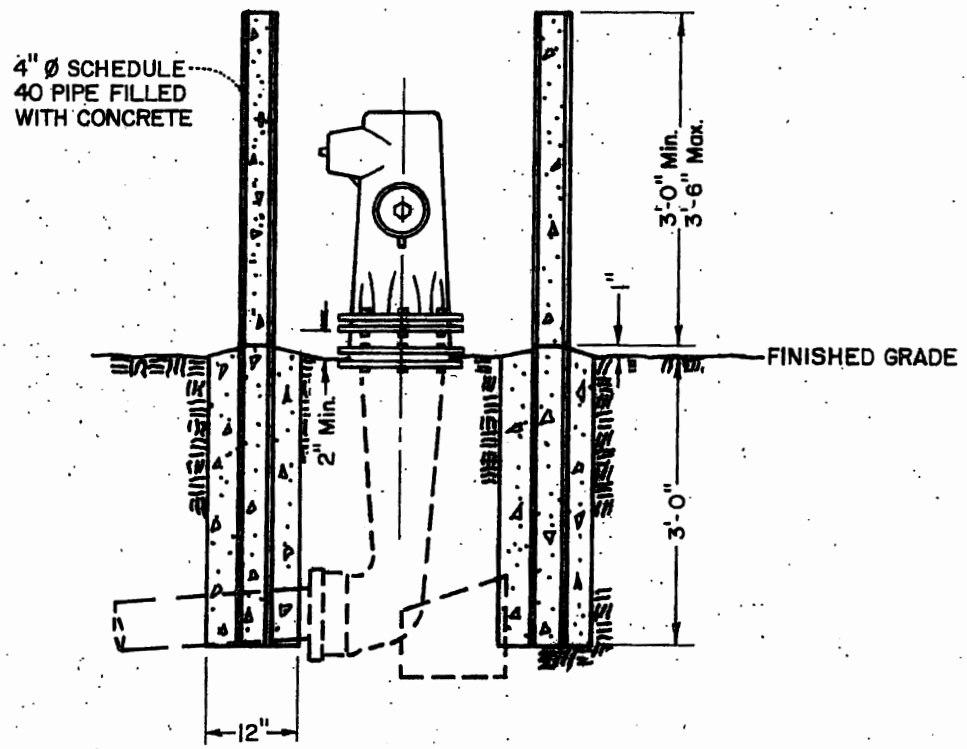

SECTION A-A

CITY OF Lindsay
DEPARTMENT OF PUBLIC WORKS

FIRE HYDRANT PROTECTION ASSEMBLY

MARK	DATE	REVISION

Engineering Standard
Approved [signature]
Date 9/13/79

WA-8